OPERATION MANUAL

DIGIFORCE® 9307
PROFINET manual

Manufacturer:
burster
praezisionsmesstechnik gmbh & co kg
Talstraße 1 - 5
D-76593 Gernsbach
Germany

Postfach 1432
D-76593 Gernsbach
Germany

Tel.: (+49) 07224 645-0
Fax.: (+49) 07224 645-88

E-Mail: info@burster.com
www.burster.com

Valid from: **22.06.2018**
Revision A

Applies to: **DIGIFORCE® 9307-V0X03**
PROFINET firmware version
PN-V16.1.0 required

2757-BA9307PROFINEN-5170-061524

Exclusion of warranty liability for operating manuals

All information in the present documentation was prepared and compiled with great care and reproduced subject to effective control measures. No warranty is provided for freedom from errors. We reserve the right to make technical changes. The present information as well as the corresponding technical data can change without notice. Reproduction of any part of this documentation or its processing or revision using electronic systems is prohibited without the manufacturer's prior written approval.

Components, devices and measured value sensors made by burster praezisionsmesstechnik (hereinafter referred to as "product") are the results of targeted development and meticulous research. As of the date of delivery, burster provides a warranty for the proper condition and functioning of these products covering material and production defects for the period specified in the warranty document accompanying the product. However, burster excludes guarantee or warranty obligations as well as any liability beyond that for consequential damages caused by improper use of the product, in particular the implied warranty of success in the market as well as the suitability of the product for a particular purpose. Furthermore, burster assumes no liability for direct, indirect or incidental damages as well as consequential or other damages arising from the provision and use of the present documentation.

PROFIBUS • PROFINET

Certificate

PROFIBUS Nutzerorganisation e.V. grants to

burster praezisionsmesstechnik gmbh & co kg
Talstrasse 1 - 5, 76593 Gernsbach, Germany

the Certificate No: **Z10876** for the PROFINET IO Device:

Model Name:	DIGIFORCE 9307-V0303
Revision:	SW/FW: V18.1.0; HW: 1
Identnumber:	0x01CE; 0x0001
GSD:	GSDML-V2.31-BURSTER-DIGIFORCE-9307-20180522-115200.xml
DAP:	DIM 24, 0x00000001

This certificate confirms that the product has successfully passed the certification tests with the following scope:

☑	PNIO_Version	V2.3
☑	Conformance Class	A, B
☑	Netload Class	III
☑	PNIO_Tester_Version	V2.3.5
☑	Tester	an testlabs, Prague, Czech Republic PN000-179

This certificate is granted according to the document:
"Framework for testing and certification of PROFIBUS and PROFINET products".
For all products that are placed in circulation by **April 29, 2019** the certificate is valid for life.

Karlsruhe, June 07, 2018

(Official in Charge)

Board of PROFIBUS Nutzerorganisation e. V.

(Karsten Schneider)

(Dr. Jörg Hähniche)

PROFI NET®

Table of contents

1 Revision history

Changes from Original (February 2015) to Revision A

Chapter	Changes
Front page	Date, device and firmware version
Page 3	Certificate
2 For your safety	Added new chapter according to DIN EN 82079-1:2013-06
3 Introduction	Updated safety instructions according to DIN EN 82079-1:2013-06
4.1 Supported PROFINET-functions	Conformance classes: A and B Specified according to PROFINET version 2.3
4.4 Electromagnetic compatibility	According to new standards
9.2.33 Read-out curve coordinates of current measurement curve with single array access	Updated description and added index 11

Changes from June 2016 to Revision B

Chapter	Changes
Page 3	Certificate

2 For your safety

The following symbols on the DIGIFORCE® 9311 and in this operation manual warn of hazards.

2.1 Symbols used in the instruction manual

2.1.1 Signal words

The following signal words are used in the operation manual according to the specified hazard classification.

⚠	**DANGER**
High degree of risk: indicates a hazardous situation which, if not avoided, will result in death or serious injury.	
⚠	**WARNING**
Moderate degree of risk: indicates a hazardous situation which, if not avoided, may result in death or serious injury.	
⚠	**CAUTION**
Low degree of risk: indicates a hazardous situation which, if not avoided, could result in minor or moderate injury.	
	NOTICE
Property damage to the equipment or the surroundings will result if the hazard is not avoided.	

Note: It is important to heed these safety notices in order to ensure you handle the DIGIFORCE® 9311 correctly.

Important: Follow the information given in the operation manual.

2.1.2 Pictograms

Symbol	Description
⚠	**Warning concerning the use and installation of the device and software.**
!	Observe the advice for protecting the instrument.

2.2 Symbols and precautionary statements on the instrument

Symbol	Description
	**Hazard warning** Disconnect the power plug before opening – Follow safety instructions – Professional servicing only
Warning ! To prevent electrical shock do not open device.	**Warning of electrical shock hazard** Do not open the unit.
To prevent fire replace only with same type and rating of fuse !	**Warning of fire hazard** Always replace the fuse with a fuse of the same type and rating.

2.3 Abbreviations

Abbreviation	Description
BF	Bus error
GSD	Device description data
GSDML	The GSDML file describes the physical properties of the device.
PI	PROFIBUS and PROFINET International (user organization)

3 Introduction

3.1 General safety instructions

DANGER

Warning concerning installation of the device and software

Installation of the device and the interface must be carried out by qualified personnel only. Qualified personnel meets the following requirements:

- You are familiar with the safety designs used in automation engineering, and understand how to deal with them in your capacity as configuration engineer.
- You are an operator of automation systems and have been instructed in how to handle the system. You are familiar with the operation of the equipment described in this documentation.
- You are a commissioning or service engineer and have successfully completed a training course qualifying you to repair automation systems. In addition you are authorized to commission, ground and label circuits and equipment in accordance with safety engineering standards.

Always observe the current safety and accident prevention regulations when commissioning the equipment.
Install automation engineering equipment and installations with sufficient protection against accidental actuation.

DANGER

Warning concerning use of the device

- Take suitable precautions in both the hardware and software to prevent any undefined states of the automation installation in the event of an open circuit.
- In installations where major damage to property or even personal injury may be caused by a malfunction, take suitable precautions to establish a safe operating state in the event of a fault. This may be achieved using limit switches, mechanical interlocks etc. for example.
- Do not make unauthorized modifications to the device or to the PROFINET interface.

NOTICE

- Install the power, signal and sensor cables so as to prevent electromagnetic interference from impairing operation of the equipment.
- Proper transportation, storage, installation and assembly plus careful operation and maintenance are essential for trouble-free and safe operation of the equipment.
- Have non-functional instruments inspected by the manufacturer.

3.2 Intended use

The DIGIFORCE® 9307 is an instrument for monitoring repetitive production processes. Its core function is to record and analyze signals from processes in which physical variables, such as force, pressure or torque, vary as a function of displacement, angle or time according to a defined curve. The resultant measurement curve is analyzed using graphical evaluation elements such as windows, envelopes and thresholds. The result of the analysis is classified as "OK" or "NOT OK" (NOK) and can be retrieved from various interfaces.

The instrument is not a substitute for a safety device; for instance it cannot be used as an emergency stop device in a press for when the pressure exceeds a set limit.

4 Technical data

4.1 Supported PROFINET-functions

- Conformance Classes: A, B
- Shared Device
- Diagnose functions (ALARMS)
- Media Redundancy Protocol (MRP)
- Link Layer Discovery Protocol (LLDP)
- I&M Services (I&M0-I&M4)

*Specified according to PROFINET version 2.3

I&M0 identification

Vendor-ID	0x01CE
Order-ID	9307-V0303
Serial	34526987
HW-Version	1
SW-Version	V16.1.0
Rev.-Counter	0
Profile-ID	0xF600
Profile type	0x0000
I&M-Version	0x0101
I&M-Support	I&M1...I&M4

Profil-ID: 0xF600 (Generic Device)

You will find further information about PROFINET at: www.profibus.com.

4.2 Model 9307 device data

Bus connector	RJ45
GSD file	GSDML-V2.31-BURSTER-DIGIFORCE-9307-20160329-155500.xml

4.3 Electrical safety

Reverse voltage protection	Yes
Air clearance/leakage paths	To DIN EN 61010-1
Electrical isolation	Between fieldbus and internal electronics
Withstand voltage	DC 500 V

4.4 Electromagnetic compatibility

4.4.1 Interference immunity

Interference immunity to EN 61326-1:2013

Industrial locations

4.4.2 Emitted interference

Emitted interference to EN 61326-1:2013

Class A

EN 61000-3-2:2014

EN 61000-3-3:2013

4.5 Notes on CE labeling

burster equipment carrying the CE mark meets the requirements of the EU directives and the harmonized European standards (EN) cited therein.

The EU declarations of conformity are available to the relevant authorities as specified in the directives. A copy of the declaration of conformity is included in the relevant equipment documentation.

5 Installation

Please note that you can download various documents such as installation guidelines and specifications about PROFINET at PI: www.profibus.com.

5.1 Connection of fieldbus lines

burster devices with a PROFINET option have two **RJ 45** connectors for the fieldbus connection.

5.2 Meaning of LED states

LED	Blinking	On
ACT	Data transmission	x
LNK / LA	PROFINET device localization	Ethernet line monitoring
SF	x	System error
US2	x	Sensor supply voltage
BF	Bus error	
BOOT	DCP signal confirmation	x
US1	x	Supply voltage

5.3 Port-Identification

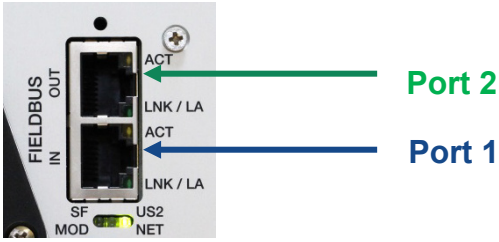

5.4 Configuration of a PROFINET network

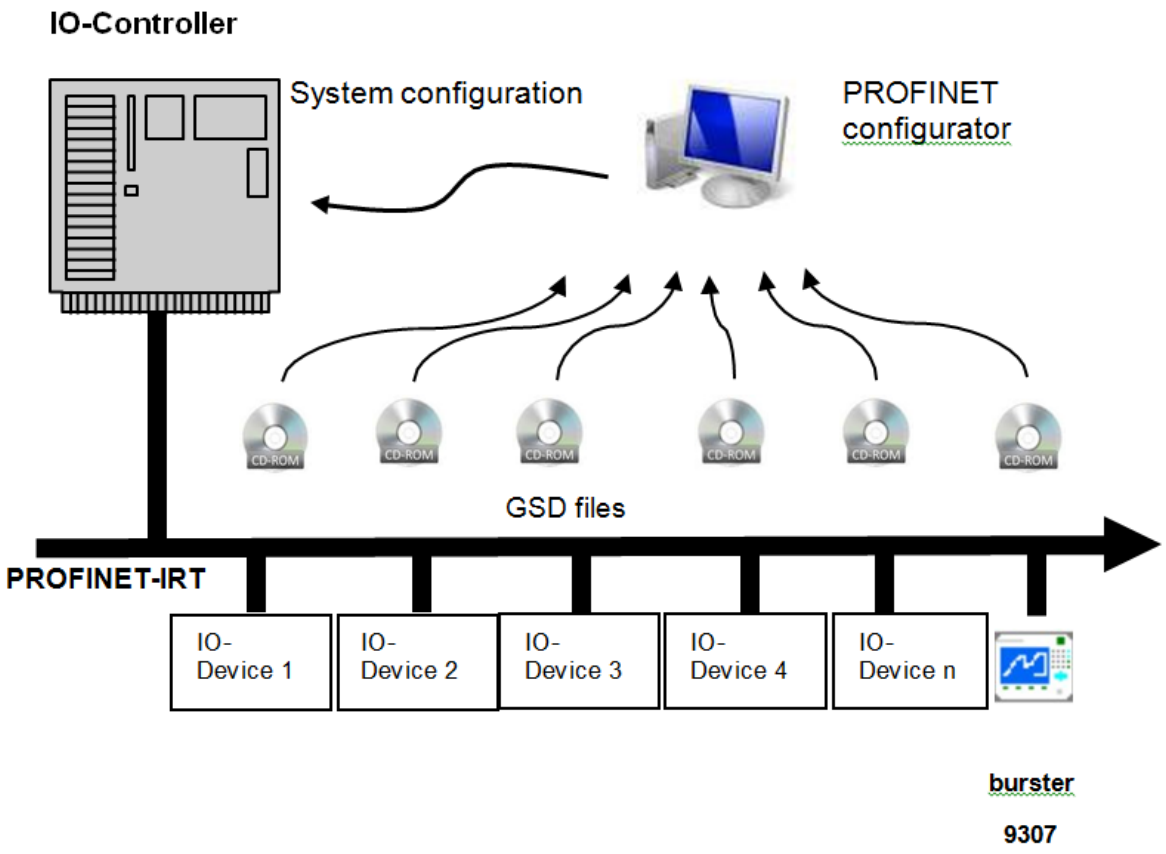

Diagram 1: Configuration of a PROFINET network

5.5 Configuration menu in DIGIFORCE® 9307

To access the menu

Start in measurement mode. After power on the measurement mode is always set. The display will look differently dependent on your settings or your last measurements.

You can go to "Main setup menu" in measurement mode by pressing the **[F5]** key twice.

This is how it works

1 In measurement mode, press the **[F5]** key twice.

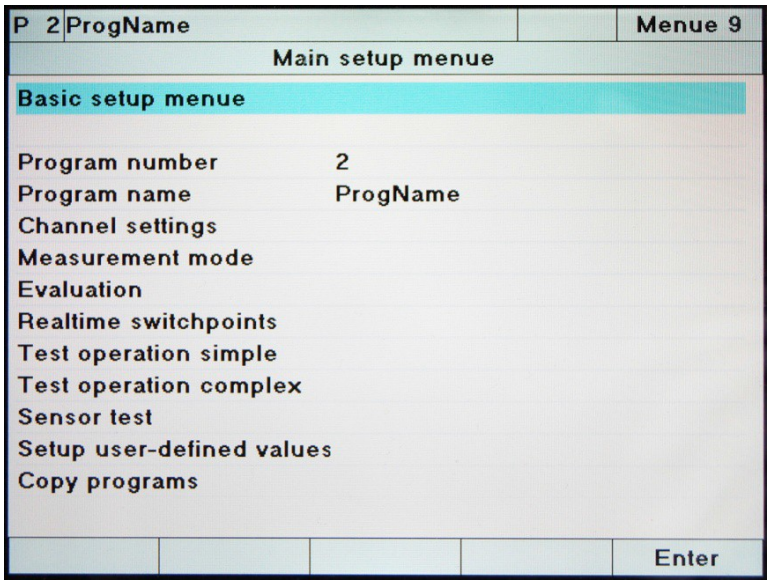

2 Press **[Enter]** to open the "Basic setup menu".

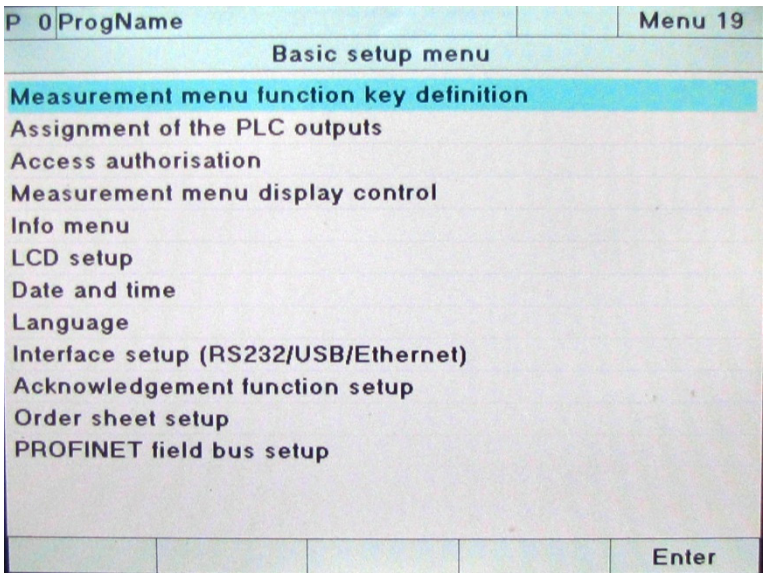

3 Select "PROFINET fieldbus Setup" menu with ▼ or ▲ and press **[Enter]**.

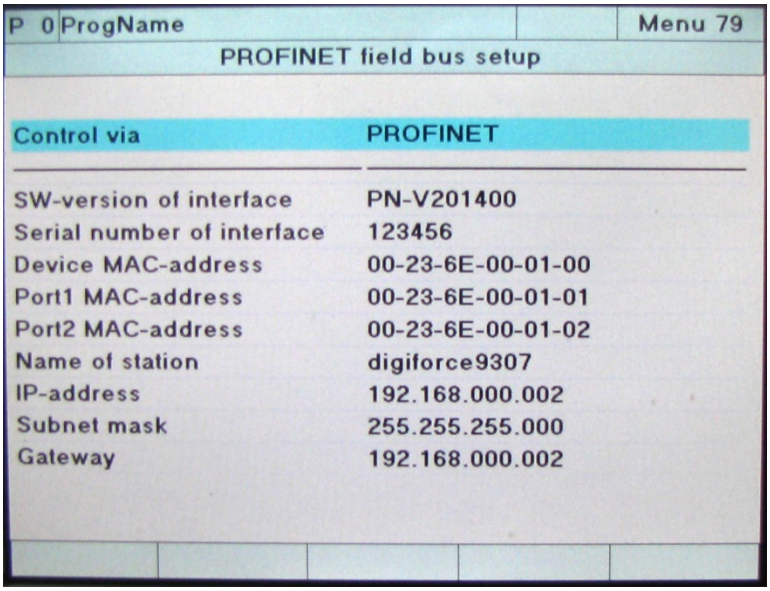

Parameters

Control via	**PROFINET**: DIGIFORCE® 9307 responds solely to control signals (inputs) on the PROFINET interface **PLC:** DIGIFORCE® 9307 responds solely to control signals (inputs) on the PLC I/O interface. When controlled via PLC I/O, data from device are still transferred in the cyclical PROFINET protocol
SW-Version of Interface	Version of the field bus card software
Serial number of interface	The serial number of the field bus card
Device MAC-address	Address to identify the field bus card inside of Profinet Network
Port1 MAC-address	Identification address of Profinet-Port 1 on the field bus card
Port1 MAC-address	Identification address of Profinet-Port 2 on the field bus card
Name of station	Name assigned to the field bus card
IP-address	IP-Address assigned by the Controller or a Configuration tool
Subnet mask	Subnet mask assigned by the Controller or a Configuration tool
Gateway	Gateway assigned by the Controller or a Configuration tool

6 PROFINET

6.1 General information on PROFINET data transfer

For PROFINET (cyclic data traffic), one must define at the configuration stage how many bytes are transferred between Controller and Device during each cyclic access (GSD file).

The device is controlled using the data transferred from Controller to Device. This data always consists of four bytes for the DIGIFORCE® 9307 unit. The function of these four bytes is explained in chapter 8.2 PLC inputs – Transfer from controller to device.

The DIGIFORCE® 9307 sends cyclic 140 bytes to controller. This packet contains PLC status and evaluation information and 30 measurement values which are user selectable within the 9307 configuration and the live values of max. 3 active measurement channels.

6.2 GSD file

DIGIFORCE® equipment with the PROFINET option is supplied with a CD. This disk includes the device description file *GSDML-V2.31-BURSTER-DIGIFORCE-9307-20160329-155500.xml* (GSD file). This GSD file describes the physical properties of the device.

The structure, contents and encoding of this device description data is standardized so that any Profinet devices can be configured using configuration tools from various manufacturers.

The GSD file does not specify what data is transferred or how this data should be interpreted. The user must glean this information from the operating manual and program his Controller accordingly.

6.3 Data conversion

6.3.1 Description of the data formats in this manual

The terms PLC inputs and PLC outputs refer to the DIGIFORCE® 9307 unit. These terms are reversed when referred to the Controller.

The function of the PLC-In / PLC-Out bits is identical to the parallel PLC I/O ports on the unit itself and can be found in the DIGIFORCE® 9307 operating manual.

The floating-point numbers ("float") mentioned are four bytes long (32 bits) and are based on the IEEE-754 standard.

Numbers that are not specifically labeled or are labeled with "d" or "dec" are decimal numbers. (Example: 1234, 1234dec, dec1234, 1234d)

Numbers that are labeled with "0x" or "hex" are hexadecimal numbers. (Example: 0x1234, hex1234, 1234hex, 1234h)

Numbers that are labeled with "b" or "bin" are binary numbers. (Example: b1100, bin1100, 1100b, 1100bin).

6.3.2 Handling problems that arise when reading floating-point numbers

This only concerns cases in which floating-point numbers need to be read from the DIGIFORCE® 9307 unit.

Floating-point numbers (data type REAL), according to IEEE 754, are encoded as four bytes for transfer. This may create problems depending on the type of PLC used.

Cause

In the DIGIFORCE® 9311-PROFINET, the sign byte is transferred first if using acylic data transfer and last while cyclic data transmission. Some PLCs expect this byte in the highest of the four addresses not in the lowest address. This inevitably leads to misinterpretation of the numeric value. In this case the order of the four bytes has to be changed by the PLC as shown in the figure.

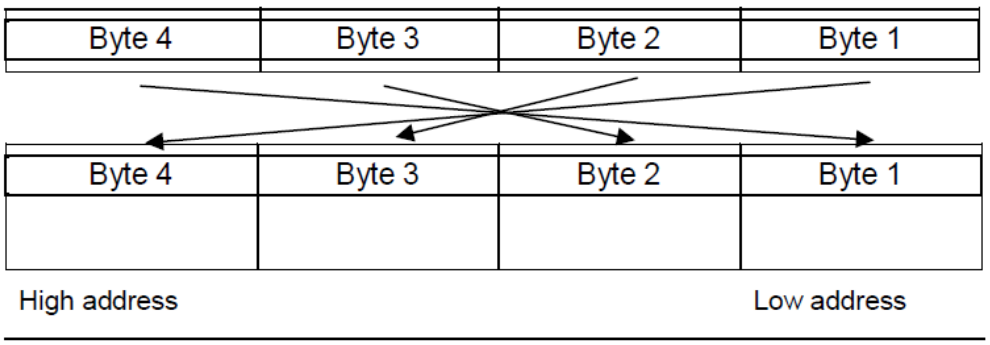

Diagram 2: Exchange of the order of bytes caused by misinterpretation of the numeric value

7 Alarms

The DIGIFORCE® 9307 supports two types of alarms: process alarms and diagnosis alarms. Currently two alarms are available. For the handling of alarms slot 200 is reserved.

Process Alarm: *Device Error* is sent if a measurement channel is overloaded or the device is not ready for the measurement.

Slot:	200
Subslot:	1
User structure identifier:	1
Alarm text:	Device error (e.g. measurement channel overload or device is not ready
Alarm text length (Byte):	71

Diagnosis Alarm: *Overtemperature* is sent if the temperature inside of the device exceeds the critical level

Slot:	200
Subslot:	1
Channel error type:	5
Extended channel error type:	1

8 PROFINET data protocol

8.1 Meaning of the content of the cyclic data packet from device to the controller

Overview of the packet content:

Content	Length/Bytes	Bytes
PLC output status	4	Σ 140 bytes
Evaluation info	4	
12 evaluation values (float) , selectable list M5-1*	12x4	
12 evaluation values (float) , selectable list M5-2*	12x4	
6 evaluation values (float), selectable list curve*	6x4	
3 live values (X, Y1, Y2) *[1]	3x4	

* The selectable list contains values which are defined within the DIGIFORCE® 9307 device. The following values are available:

- General curve data Y1
- General curve data Y2
- Evaluation results of mathematical functions
- Evaluation results of each evaluation element (e.g. window entry/exit window extended evaluation results like Min/Max window limits Xmin, Xmax, Ymin, Ymax threshold crossing point.)

*[1] The live values of the sensor channels are updated at a rate of 100 Hz. The values are only updated when the DIGIFORCE® 9307 is ready to record measurements or is actively taking a measurement.

How to define the selectable list: The parameterization of the selectable lists is done in the main setup menu "Setup user defined values" (Note that this setting is specific for each measurement program. For details refer to the DIGIFORCE® 9307 operation manual, section 5.13 User defined values.)

8.2 PLC inputs – Transfer from controller to device

Four bytes of PLC-In data for the DIGIFORCE 9307 are always transferred from the PROFINET Controller to the DIGIFORCE® 9307. These bits have the same function as the parallel PLC inputs to the DIGIFORCE® 9307 unit. (See detailed documentation of these signals within the DIGIFORCE® 9307 operation manual, section 4.4.1 PLC-Interface)

8.2.1 PLC inputs byte 1 (controller to device)

PLC inputs Byte 1 (Controller → Device)		
Valid values:	IN_PROG0	Bit 0 LSB
	IN_PROG1	Bit 1
Set reserved bits to '0'	IN_PROG2	Bit 2
	IN_PROG3	Bit 3
	IN_PROG4	Bit 4
	reserved	Bit 5
	reserved	Bit 6
	reserved	Bit 7 MSB

8.2.2 PLC inputs byte 2 (controller to device)

PLC inputs Byte 2 (Controller → Device)		
Valid values:	IN_STROBE	Bit 0 LSB
	IN_ACK_OK	Bit 1
Set reserved bits to '0'	IN_ACK_NOK	Bit 2
	IN_TEST_OP	Bit 3
	IN_TEST_OPC	Bit 4
	IN_AUTO	Bit 5
	reserved	Bit 6
	IN_REF_MEAS	Bit 7 MSB

8.2.3 PLC inputs byte 3 (controller to device)

PLC inputs Byte 3 (Controller → Device)		
Valid values:	IN_RESET	Bit 0 LSB
	IN_PROG6*	Bit 1
Set reserved bits to '0'	IN_STEST	Bit 2
	IN_PROG5*	Bit 3
	reserved	Bit 4
	IN_TAREX	Bit 5
	IN_TAREY1	Bit 6
	IN_TAREY2	Bit 7 MSB

* IN_PROG[6..5] necessary with 9307 firmware for 128 measurement programs. If not used set this bits to "0".

8.2.4 PLC inputs byte 4 (controller to device)

PLC inputs Byte 4 (Controller → Device)		
Valid values:	IN_START	Bit 0 LSB
	reserved	Bit 1
Set reserved bits to '0'	reserved	Bit 2
	reserved	Bit 3
	reserved	Bit 4
	reserved	Bit 5
	reserved	Bit 6
	reserved	Bit 7 MSB

8.3 PLC outputs – Transfer from device to controller

The data refers to the PLC output of the DIGIFORCE® 9307. The data described here is the data transferred from the DIGIFORCE® 9307 to the PROFINET controller.

The function of the PLC-In / PLC-Out bits is identical to the parallel PLC I/O ports on the unit itself and can be found in the DIGIFORCE® 9307 operation manual for the unit. Also the signal timing is available within the DIGIFORCE® 9307 operation manual.

8.3.1 PLC outputs byte 1

PLC outputs Byte 1 (Device → Controller)		
Valid values:	OUT_READY	Bit 0 LSB
	OUT_ERROR	Bit 1
	OUT_NOK_ONL1	Bit 2
	OUT_NOK_ONL2	Bit 3
	OUT_OK	Bit 4
	OUT_NOK	Bit 5
	OUT_S1	Bit 6
	OUT_S2	Bit 7 MSB

8.3.2 PLC outputs byte 2 (9307 adjustable outputs)

PLC outputs Byte 2 (Device → Controller)		
Valid values:	PLC_OUT8	Bit 0 LSB
	PLC_OUT7	Bit 1
	PLC_OUT6	Bit 2
	PLC_OUT5	Bit 3
	PLC_OUT4	Bit 4
	PLC_OUT3	Bit 5
	PLC_OUT2	Bit 6
	PLC_OUT1	Bit 7 MSB

8.3.3 PLC outputs byte 3 (9307 adjustable outputs)

PLC outputs Byte 3 (Device → Controller)		
Valid values:	PLC_OUT9	Bit 0 LSB
	PLC_OUT10	Bit 1
	PLC_OUT11	Bit 2
	PLC_OUT12	Bit 3
	PLC_OUT13	Bit 4
	PLC_OUT14	Bit 5
	PLC_OUT15	Bit 6
	PLC_OUT16	Bit 7 MSB

8.3.4 PLC outputs byte 4 (9307 adjustable outputs)

PLC outputs Byte 4 (Device → Controller)		
Valid values:	reserved	Bit 0 LSB
	PLC_OUT23	Bit 1
	PLC_OUT22	Bit 2
	PLC_OUT21	Bit 3
	PLC_OUT20	Bit 4
	PLC_OUT19	Bit 5
	PLC_OUT18	Bit 6
	PLC_OUT17	Bit 7 MSB

NOTE	Note that PLC outputs PLC_OUT[23..1] could be assigned with different functions. The assignment could be changed within the DIGIFORCE® 9307 basic setup menu "Assignment of the PLC outputs"(see DIGIFORCE® 9307 operation manual chapter 5.3.9 Assigning PLC outputs).

8.3.5 Default assignment of output byte [4..2] adjustable outputs

9307 adjustable PLC outputs default assignment		
	PLC_OUT1	OUT_STROBE
	PLC_OUT2	OUT_OK_SENSORTEST
	PLC_OUT3	OUT_NOK_WINDOW_9
	PLC_OUT4	OUT_PROG0
	PLC_OUT5	OUT_PROG1
	PLC_OUT6	OUT_PROG2
	PLC_OUT7	OUT_PROG3
	PLC_OUT8	OUT_PROG4
	PLC_OUT9	OUT_S3
	PLC_OUT10	OUT_S4
	PLC_OUT11	OUT_NOK_WINDOW_8
	PLC_OUT12	OUT_NOK_WINDOW_7
	PLC_OUT13	OUT_NOK_WINDOW_6
	PLC_OUT14	OUT_NOK_WINDOW_5
	PLC_OUT15	OUT_NOK_WINDOW_4
	PLC_OUT16	OUT_NOK_WINDOW_3
	PLC_OUT17	OUT_NOK_WINDOW_2
	PLC_OUT18	OUT_NOK_WINDOW_1
	PLC_OUT19	OUT_WARNING_TARE
	PLC_OUT20	OUT_WARNING_TOOLCOUNT
	PLC_OUT21	OUT_WARNING_TOTAL
	PLC_OUT22	OUT_TEST_OP_SIMPLE
	PLC_OUT23	OUT_TEST_OP_COMPLEX

8.4 Evaluation info

The evaluation info (4 byte) contains the evaluation result of each element.

8.4.1 Evaluation info byte 1

Evaluation info byte 1 (Device → Controller)		
Valid values:	Window_1_NOK	Bit 0 LSB
	Window_2_NOK	Bit 1
	Window_3_NOK	Bit 2
	Window_4_NOK	Bit 3
	Window_5_NOK	Bit 4
	Window_6_NOK	Bit 5
	Window_7_NOK	Bit 6
	Window_8_NOK	Bit 7 MSB

8.4.2 Evaluation info byte 2

Evaluation info byte 2 (Device → Controller)		
Valid values:	Window_9_NOK	Bit 0 LSB
	Window_10_NOK	Bit 1
	Trapezoid_X1_NOK	Bit 2
	Trapezoid_X2_NOK	Bit 3
	Trapezoid_Y1_NOK	Bit 4
	Trapezoid_Y2_NOK	Bit 5
	Threshold_1_NOK	Bit 6
	Threshold _2_NOK	Bit 7 MSB

8.4.3 Evaluation info byte 3

Evaluation info byte 3 (Device → Controller)		
Valid values:	Threshold_3_NOK	Bit 0 LSB
	Threshold_4_NOK	Bit 1
	Envelope_1_NOK	Bit 2
	Envelope_2_NOK	Bit 3
	Math_Evaluation_1_NOK	Bit 4
	Math_Evaluation_2_NOK	Bit 5
	Math_Evaluation_3_NOK	Bit 6
	Math_Evaluation_4_NOK	Bit 7 MSB

8.4.4 Evaluation info byte 4

Evaluation info byte 4 (Device → Controller)		
Valid values:	Math_Evaluation_5_NOK	Bit 0 LSB
	Math_Evaluation_6_NOK	Bit 1
	Rotary_Switch_1_NOK	Bit 2
	Rotary_Switch_2_NOK	Bit 3
	MeasChannel_Overload	Bit 4
	Curve_Y1_NOK	Bit 5
	Curve_Y2_NOK	Bit 6
	Global_NOK	Bit 7 MSB

8.5 Byte reference list

Data from controller to device

Byte	Function	Section	Comments
0	PLC inputs Byte 1	6.2.1	
1	PLC inputs Byte 2	6.2.2	
2	PLC inputs Byte 3	6.2.3	
3	PLC inputs Byte 4	6.2.4	

Data from device to controller

Byte	Function	Section	Comments
0	PLC outputs Byte 1	6.3.1	
1	PLC outputs Byte 2	6.3.2	
2	PLC outputs Byte 3	6.3.3	
3	PLC outputs Byte 4	6.3.4	
4	Evaluation info Byte 1	6.4.1	
5	Evaluation info Byte 2	6.4.2	
6	Evaluation info Byte 3	6.4.3	
7	Evaluation info Byte 4	6.4.4	
8	M5-1 value_1 (1st Byte)	see DIGIFORCE® 9307 operation manual chapter 5.13	User defined value in DIGIFORCE® 9307 List M5-1 (32-Bit float)
9	M5-1 value_1 (2nd Byte)	see above	
10	M5-1 value_1 (3rd Byte)	see above	
11	M5-1 value_1 (4th Byte)	see above	
12	M5-1 value_2 (1st Byte)	see above	User defined value in DIGIFORCE® 9307 List M5-1 (32-Bit float)
13	M5-1 value_2 (2nd Byte)	see above	
14	M5-1 value_2 (3rd Byte)	see above	
15	M5-1 value_2 (4th Byte)	see above	
16	M5-1 value_3 (1st Byte)	see above	User defined value in DIGIFORCE® 9307 List M5-1 (32-Bit float)
17	M5-1 value_3 (2nd Byte)	see above	
18	M5-1 value_3 (3rd Byte)	see above	
19	M5-1 value_3 (4th Byte)	see above	

Byte	Function	Section	Comments
20	M5-1 value_4 (1st Byte)	see above	User defined value in DIGIFORCE® 9307 List M5-1 (32-Bit float)
21	M5-1 value_4 (2nd Byte)	see above	
22	M5-1 value_4 (3rd Byte)	see above	
23	M5-1 value_4 (4th Byte)	see above	
24	M5-1 value_5 (1st Byte)	see above	User defined value in DIGIFORCE® 9307 List M5-1 (32-Bit float)
25	M5-1 value_5 (2nd Byte)	see above	
26	M5-1 value_5 (3rd Byte)	see above	
27	M5-1 value_5 (4th Byte)	see above	
28	M5-1 value_6 (1st Byte)	see above	User defined value in DIGIFORCE® 9307 List M5-1 (32-Bit float)
29	M5-1 value_6 (2nd Byte)	see above	
30	M5-1 value_6 (3rd Byte)	see above	
31	M5-1 value_6 (4th Byte)	see above	
32	M5-1 value_7 (1st Byte)	see above	User defined value in DIGIFORCE® 9307 List M5-1 (32-Bit float)
33	M5-1 value_7 (2nd Byte)	see above	
34	M5-1 value_7 (3rd Byte)	see above	
35	M5-1 value_7 (4th Byte)	see above	
36	M5-1 value_8 (1st Byte)	see above	User defined value in DIGIFORCE® 9307 List M5-1 (32-Bit float)
37	M5-1 value_8 (2nd Byte)	see above	
38	M5-1 value_8 (3rd Byte)	see above	
39	M5-1 value_8 (4th Byte)	see above	
40	M5-1 value_9 (1st Byte)	see above	User defined value in DIGIFORCE® 9307 List M5-1 (32-Bit float)
41	M5-1 value_9 (2nd Byte)	see above	
42	M5-1 value_9 (3rd Byte)	see above	
43	M5-1 value_9 (4th Byte)	see above	
44	M5-1 value_10 (1st Byte)	see above	User defined value in DIGIFORCE® 9307 List M5-1 (32-Bit float)
45	M5-1 value_10 (2nd Byte)	see above	
46	M5-1 value_10 (3rd Byte)	see above	
47	M5-1 value_10 (4th Byte)	see above	
48	M5-1 value_11 (1st Byte)	see above	User defined value in

Byte	Function	Section	Comments
49	M5-1 value_11 (2nd Byte)	see above	DIGIFORCE® 9307 List M5-1 (32-Bit float)
50	M5-1 value_11 (3rd Byte)	see above	
51	M5-1 value_11 (4th Byte)	see above	
52	M5-1 value_12 (1st Byte)	see above	User defined value in DIGIFORCE® 9307 List M5-1 (32-Bit float)
53	M5-1 value_12 (2nd Byte)	see above	
54	M5-1 value_12 (3rd Byte)	see above	
55	M5-1 value_12 (4th Byte)	see above	
56	M5-2 value_1 (1st Byte)	see above	User defined value in DIGIFORCE® 9307 List M5-2 (32-Bit float)
57	M5-2 value_1 (2nd Byte)	see above	
58	M5-2 value_1 (3rd Byte)	see above	
59	M5-2 value_1 (4th Byte)	see above	
60	M5-2 value_2 (1st Byte)	see above	User defined value in DIGIFORCE® 9307 List M5-2 (32-Bit float)
61	M5-2 value_2 (2nd Byte)	see above	
62	M5-2 value_2 (3rd Byte)	see above	
63	M5-2 value_2 (4th Byte)	see above	
64	M5-2 value_3 (1st Byte)	see above	User defined value in DIGIFORCE® 9307 List M5-2 (32-Bit float)
65	M5-2 value_3 (2nd Byte)	see above	
66	M5-2 value_3 (3rd Byte)	see above	
67	M5-2 value_3 (4th Byte)	see above	
68	M5-2 value_4 (1st Byte)	see above	User defined value in DIGIFORCE® 9307 List M5-2 (32-Bit float)
69	M5-2 value_4 (2nd Byte)	see above	
70	M5-2 value_4 (3rd Byte)	see above	
71	M5-2 value_4 (4th Byte)	see above	
72	M5-2 value_5 (1st Byte)	see above	User defined value in DIGIFORCE® 9307 List M5-2 (32-Bit float)
73	M5-2 value_5 (2nd Byte)	see above	
74	M5-2 value_5 (3rd Byte)	see above	
75	M5-2 value_5 (4th Byte)	see above	
76	M5-2 value_6 (1st Byte)	see above	User defined value in DIGIFORCE® 9307 List M5-2 (32-Bit float)
77	M5-2 value_6 (2nd Byte)	see above	

Byte	Function	Section	Comments
78	M5-2 value_6 (3rd Byte)	see above	
79	M5-2 value_6 (4th Byte)	see above	
80	M5-2 value_7 (1st Byte)	see above	User defined value in DIGIFORCE® 9307 List M5-2 (32-Bit float)
81	M5-2 value_7 (2nd Byte)	see above	
82	M5-2 value_7 (3rd Byte)	see above	
83	M5-2 value_7 (4th Byte)	see above	
84	M5-2 value_8 (1st Byte)	see above	User defined value in DIGIFORCE® 9307 List M5-2 (32-Bit float)
85	M5-2 value_8 (2nd Byte)	see above	
86	M5-2 value_8 (3rd Byte)	see above	
87	M5-2 value_8 (4th Byte)	see above	
88	M5-2 value_9 (1st Byte)	see above	User defined value in DIGIFORCE® 9307 List M5-2 (32-Bit float)
89	M5-2 value_9 (2nd Byte)	see above	
90	M5-2 value_9 (3rd Byte)	see above	
91	M5-2 value_9 (4th Byte)	see above	
92	M5-2 value_10 (1st Byte)	see above	User defined value in DIGIFORCE® 9307 List M5-2 (32-Bit float)
93	M5-2 value_10 (2nd Byte)	see above	
94	M5-2 value_10 (3rd Byte)	see above	
95	M5-2 value_10 (4th Byte)	see above	
96	M5-2 value_11 (1st Byte)	see above	User defined value in DIGIFORCE® 9307 List M5-2 (32-Bit float)
97	M5-2 value_11 (2nd Byte)	see above	
98	M5-2 value_11 (3rd Byte)	see above	
99	M5-2 value_11 (4th Byte)	see above	
100	M5-2 value_12 (1st Byte)	see above	User defined value in DIGIFORCE® 9307 List M5-2 (32-Bit float)
101	M5-2 value_12 (2nd Byte)	see above	
102	M5-2 value_12 (3rd Byte)	see above	
103	M5-2 value_12 (4th Byte)	see above	
104	M1_Curvevalue_1 (1st Byte)	see above	User defined value in DIGIFORCE® 9307 value in curve M1 (32-Bit float)
105	M1_Curvevalue_1 (2nd Byte)	see above	
106	M1_Curvevalue_1 (3rd Byte)	see above	

Byte	Function	Section	Comments
107	M1_Curvevalue_1 (4th Byte)	see above	
108	M1_Curvevalue_2 (1st Byte)	see above	User defined value in DIGIFORCE® 9307 value in curve M1 (32-Bit float)
109	M1_Curvevalue_2 (2nd Byte)	see above	
110	M1_Curvevalue_2 (3rd Byte)	see above	
111	M1_Curvevalue_2 (4th Byte)	see above	
112	M1_Curvevalue_3 (1st Byte)	see above	User defined value in DIGIFORCE® 9307 value in curve M1 (32-Bit float)
113	M1_Curvevalue_3 (2nd Byte)	see above	
114	M1_Curvevalue_3 (3rd Byte)	see above	
115	M1_Curvevalue_3 (4th Byte)	see above	
116	M1_Curvevalue_4 (1st Byte)	see above	User defined value in DIGIFORCE® 9307 value in curve M1 (32-Bit float)
117	M1_Curvevalue_4 (2nd Byte)	see above	
118	M1_Curvevalue_4 (3rd Byte)	see above	
119	M1_Curvevalue_4 (4th Byte)	see above	
120	M1_Curvevalue_5 (1st Byte)	see above	User defined value in DIGIFORCE® 9307 value in curve M1 (32-Bit float)
121	M1_Curvevalue_5 (2nd Byte)	see above	
122	M1_Curvevalue_5 (3rd Byte)	see above	
123	M1_Curvevalue_5 (4th Byte)	see above	
124	M1_Curvevalue_6 (1st Byte)	see above	User defined value in DIGIFORCE® 9307 value in curve M1 (32-Bit float)
125	M1_Curvevalue_6 (2nd Byte)	see above	
126	M1_Curvevalue_6 (3rd Byte)	see above	
127	M1_Curvevalue_6 (4th Byte)	see above	
128	Live value Channel X (1st Byte)		(32-Bit float) Channel X live value Updating rate of the live values 100/sec.
129	Live value Channel X (2nd Byte)		
130	Live value Channel X (3rd Byte)		
131	Live value Channel X (4th Byte)		
132	Live value Channel Y1 (1st Byte)		(32-Bit float) Channel Y1 live value Updating rate of the live values 100/sec.
133	Live value Channel Y1 (2nd Byte)		
134	Live value Channel Y1 (3rd Byte)		
135	Live value Channel Y1 (4th Byte)		

Byte	Function	Section	Comments
136	Live value Channel Y2 (1_{st} Byte)		(32-Bit float) Channel Y2 live value Updating rate of the live values $^{100}/_{sec}$.
137	Live value Channel Y2 (2_{nd} Byte)		
138	Live value Channel Y2 (3_{rd} Byte)		
139	Live value Channel Y2 (4_{th} Byte)		

9 Acyclic PROFINET services

The services are described from the point of view of the controller.

Please Note: The subslot number has always to be set to 1.

The acyclic PROFINET services allow access to following DIGIFORCE® 9307 functions:

- Complete device configuration
- Transfer of component/worker/job data for logging
- Retrieval of large amounts of process and curve data

For further information and support for Siemens PLC integration please contact our service department at service@burster.com.

9.1 Instrument configuration

9.1.1 General settings (Slot 30)

Slot 30, Indices 1 to 20

Slot	Index	Description	Value	Meaning of value	Type	Len	R/W
30	0		-	Not possible			X
30	1…9	Reserved	-	Not possible			X
30	10	Device detection	*DIGIFORCE model 9307*		STR 18	18	RO
30	11	Serial number	*12345678*		STR 11	11	RO
30	12	Software version	*V201100*		STR 25	25	RO
30	13	Version boot loader software	*V201100*		STR 25	25	RO
30	14	Software version Field bus interface	*PB-V201100*		STR 25	25	RO
30	15	Optional analog interface enabled	*0* *1* *2* *3* *4* *5* *6* *7*	No option Torque Piezo Torque+Piezo Resistance Torque+Resistance Piezo+Resistance Torque+Piezo+ Resistance	U16	2	RO
30	16	Info: Calibration date analog interface	*07.11.2012*		STR 10	10	RO
30	17	Info: Calibration date optional analog interface	*07.11.2012*		STR 10	10	RO
30	18	Reserved	-	Not possible			XX

30	19	Station name	*Stat14 right*		STR 15	15	RW
30	20	Tool counter	*0 … 4294967296*		U32	4	RO

Slot 30, Indices 21 to 40

Slot	Index	Description	Value	Meaning of value	Type	Len	R/W
30	21	Standard value for tool counter	*0 … 4294967296*		U32	4	RW
30	22	Reset tool counter	*EVENT!*	Writing an arbitrary byte initiates action	U8	1	WO
30	23	Language	*0* *1* *2* *3* *4*	German English French Spanish Italian	U16	2	RW
30	24	Date	*[dd.mm.yyyy]*	e.g.: 21.09.1963	STR 10	10	RW
30	25	Time	*[hh:mm:ss], 24h*	e.g.: 22:15:00	STR 8	8	RW
30	26	LCD brightness	*1 … 10*	Integer value (10 max.)	U16	2	RW
30	27	Background graphical display bright/dark	*0* *1*	dark bright	U16	2	RW
30	28	Measurement menu function key definition F1	*0* *1* *2* *3* *4* *5* *6* *7* *8* *9* *10* *11* *12* *13*	Off Meas. menu page up Meas. menu page down Meas. program incremental Meas. program decremental Tare X Tare Y Tare Y2 Measurement Start/Stop Acknowledge OK parts Acknowledge NOK parts Sensor test Reference measurement Edit mode	U16	2	RW
30	29	Measurement menu function key definition F2	*0* *1* *2* *3* *4* *5* *6* *7* *8* *9* *10* *11* *12* *13*	Off Meas. menu page up Meas. menu page down Meas. program incremental Meas. program decremental Tare X Tare Y Tare Y2 Measurement Start/Stop Acknowledge OK parts Acknowledge NOK parts Sensor test Reference measurement Edit mode	U16	2	RW

Slot	Index	Description	Value	Meaning of value	Type	Len	R/W
30	30	Measurement menu function key definition F3	*0* *1* *2* *3* *4* *5* *6* *7* *8* *9* *10* *11* *12* *13*	Off Meas. menu page up Meas. menu page down Meas. program incremental Meas. program decremental Tare X Tare Y Tare Y2 Measurement Start/Stop Acknowledge OK parts Acknowledge NOK parts Sensor test Reference measurement Edit mode	U16	2	RW
30	31	Measurement menu function key definition F4	*0* *1* *2* *3* *4* *5* *6* *7* *8* *9* *10* *11* *12* *13*	Off Meas. menu page up Meas. menu page down Meas. program incremental Meas. program decremental Tare X Tare Y Tare Y2 Measurement Start/Stop Acknowledge OK parts Acknowledge NOK parts Sensor test Reference measurement Edit mode	U16	2	RW
30	32	Meas. menu display control GRAPHIC	*0* *1*	Meas. menu disabled Meas. menu enabled	U16	2	RW
30	33	Meas. menu display control Show CURVE ARRAY	*0* *1*	Meas. menu disabled Meas. menu enabled	U16	2	RW
30	34	Meas. menu display control GENERAL CURVE DATA	*0* *1*	Meas. menu disabled Meas. menu enabled	U16	2	RW
30	35	Meas. menu display control TOTAL (Off/Smiley/text)	*0* *1* *2*	Meas. menu disabled Smiley Text	U16	2	RW
30	36	Meas. menu display control ENTRY/EXIT VALUES	*0* *1*	Meas. menu disabled Meas. menu enabled	U16	2	RW
30	37	Meas. menu display control USER DEFINED MEAS. VALUES	*0* *1*	Meas. menu disabled Meas. menu enabled	U16	2	RW

Slot	Index	Description	Value	Meaning of value	Type	Len	R/W
30	38	Meas. menu display control STATISTICS	*0* *1*	Meas. menu disabled Meas. menu enabled	U16	2	RW
30	39	Meas. menu display control ORDER SHEET	*0* *1*	Meas. menu disabled Meas. menu enabled	U16	2	RW
30	40	Meas. menu display control ROTARY SWITCH	*0* *1*	Meas. menu disabled Meas. menu enabled	U16	2	RW

Slot 30, Indices 41 to 58

Slot	Index	Description	Value	Meaning of value	Type	Len	R/W
30	41	Display the measurement menu, read the currently displayed measurement menu **Note**: The menu is selected here, but not yet displayed. Display only occurs through access to slot 30/115.	*101* *102* *103* *104* *105* *106* *107* *108* *109* *110* *111* *112* *113*	Y1 displaying meas. curves Y2 displaying meas. curves Y1 / Y2 displaying meas. curves General curve data Y1 General curve data Y2 Smiley, Pass/Fail display. Entry/Exit of window Entry/Exit of evaluation elements (except for window) User selected values 1 - 12 User selected values 13 - 24 Display statistics Order sheet Results of evaluation rotary switch	U16	2	RW
30	42	Access authorisation Password protection on/off	*0* *1*	Password protection on Password protection off	U16	2	RW
30	43	Access authorisation BASIC SETUP MENU	*0* *1*	Access level disabled Access level enabled	U16	2	RW
30	44	Access authorisation MIN. SETUP MENU	*0* *1*	Access level disabled Access level enabled	U16	2	RW
30	45	Access authorisation MAIN SETUP MENU	*0* *1*	Access level disabled Access level enabled	U16	2	RW
30	46	Access authorisation CHANNEL SETUP MENU	*0* *1*	Access level disabled Access level enabled	U16	2	RW

Slot	Index	Description	Value	Meaning of value	Type	Len	R/W
30	47	Access authorisation MEASUREMENT MODE	*0* *1*	Access level disabled Access level enabled	U16	2	RW
30	48	Access authorisation EVALUATION	*0* *1*	Access level disabled Access level enabled	U16	2	RW
30	49	Access authorisation SWITCHPOINTS	*0* *1*	Access level disabled Access level enabled	U16	2	RW
30	50	Access authorisation TEST OPERATION SIMPLE	*0* *1*	Access level disabled Access level enabled	U16	2	RW
30	51	Access authorisation TEST OPERATION COMPLEX	*0* *1*	Access level disabled Access level enabled	U16	2	RW
30	52	Access authorisation SENSOR TEST	*0* *1*	Access level disabled Access level enabled	U16	2	RW
30	53	Access authorisation USER DEFINED VALUES	*0* *1*	Access level disabled Access level enabled	U16	2	RW
30	54	Access authorisation COPY PROGRAMS	*0* *1*	Access level disabled Access level enabled	U16	2	RW
30	55	Reserved	-	-	-	-	-
30	56	Master password	*0000 … 9999*		U16	2	RW
30	57	Set Master password to default	*EVENT!*	Writing an arbitrary byte initiates action	U8	1	WO
30	58	User password	*0000 … 9999*		U16	2	RW

Slot 30, Index 59 (Assignment adjustable PLC outputs 1)

Slot	Index	Description	Value	Meaning of value	Type	Len	R/W
30	59	adj. PLC output 1 (Pin 2)	*0*	Switchpoint S3	U16	2	RW
30	59	adj. PLC output 1 (Pin 2)	*1*	Switchpoint S4	U16	2	RW
30	59	adj. PLC output 1 (Pin 2)	*2*	Strobe (switch program)	U16	2	RW
30	59	adj. PLC output 1 (Pin 2)	*3*	A0 (switch program)	U16	2	RW
30	59	adj. PLC output 1 (Pin 2)	*4*	A1 (switch program)	U16	2	RW
30	59	adj. PLC output 1 (Pin 2)	*5*	A2 (switch program)	U16	2	RW

Slot	Index	Description	Value	Meaning of value	Type	Len	R/W
30	59	adj. PLC output 1 (Pin 2)	*6*	A3 (switch program)	U16	2	RW
30	59	adj. PLC output 1 (Pin 2)	*7*	A4 (switch program)	U16	2	RW
30	59	adj. PLC output 1 (Pin 2)	*8*	Tare warning	U16	2	RW
30	59	adj. PLC output 1 (Pin 2)	*9*	Warning tool counter	U16	2	RW
30	59	adj. PLC output 1 (Pin 2)	*10*	Warning Total	U16	2	RW
30	59	adj. PLC output 1 (Pin 2)	*11*	OK sensor test	U16	2	RW
30	59	adj. PLC output 1 (Pin 2)	*12*	Test operation simple	U16	2	RW
30	59	adj. PLC output 1 (Pin 2)	*13*	Test operation complex	U16	2	RW
30	59	adj. PLC output 1 (Pin 2)	*14*	Measurement running	U16	2	RW
30	59	adj. PLC output 1 (Pin 2)	*15*	Configuration operation	U16	2	RW
30	59	adj. PLC output 1 (Pin 2)	*16*	Traffic light alarm	U16	2	RW
30	59	adj. PLC output 1 (Pin 2)	*17*	Traffic light lock	U16	2	RW
30	59	adj. PLC output 1 (Pin 2)	*18*	Traffic light OK (green)	U16	2	RW
30	59	adj. PLC output 1 (Pin 2)	*19*	Traffic light NOK (red)	U16	2	RW
30	59	adj. PLC output 1 (Pin 2)	*20*	NOK window 1	U16	2	RW
30	59	adj. PLC output 1 (Pin 2)	*21*	NOK window 2	U16	2	RW
30	59	adj. PLC output 1 (Pin 2)	*22*	NOK window 3	U16	2	RW
30	59	adj. PLC output 1 (Pin 2)	*23*	NOK window 4	U16	2	RW
30	59	adj. PLC output 1 (Pin 2)	*24*	NOK window 5	U16	2	RW
30	59	adj. PLC output 1 (Pin 2)	*25*	NOK window 6	U16	2	RW
30	59	adj. PLC output 1 (Pin 2)	*26*	NOK window 7	U16	2	RW
30	59	adj. PLC output 1 (Pin 2)	*27*	NOK window 8	U16	2	RW
30	59	adj. PLC output 1 (Pin 2)	*28*	NOK window 9	U16	2	RW
30	59	adj. PLC output 1 (Pin 2)	*29*	NOK window 10	U16	2	RW
30	59	adj. PLC output 1 (Pin 2)	*30*	NOK trapezoid window X 1	U16	2	RW
30	59	adj. PLC output 1 (Pin 2)	*31*	NOK trapezoid window X 3	U16	2	RW
30	59	adj. PLC output 1 (Pin 2)	*32*	NOK trapezoid window Y 1	U16	2	RW
30	59	adj. PLC output 1 (Pin 2)	*33*	NOK trapezoid window X 2	U16	2	RW
30	59	adj. PLC output 1 (Pin 2)	*34*	NOK threshold 1	U16	2	RW

Slot	Index	Description	Value	Meaning of value	Type	Len	R/W
30	59	adj. PLC output 1 (Pin 2)	*35*	NOK threshold 2	U16	2	RW
30	59	adj. PLC output 1 (Pin 2)	*36*	NOK threshold 3	U16	2	RW
30	59	adj. PLC output 1 (Pin 2)	*37*	NOK threshold 4	U16	2	RW
30	59	adj. PLC output 1 (Pin 2)	*38*	NOK envelope 1	U16	2	RW
30	59	adj. PLC output 1 (Pin 2)	*39*	NOK envelope 2	U16	2	RW
30	59	adj. PLC output 1 (Pin 2)	*40*	NOK result math 1	U16	2	RW
30	59	adj. PLC output 1 (Pin 2)	*41*	NOK result math 2	U16	2	RW
30	59	adj. PLC output 1 (Pin 2)	*42*	NOK result math 3	U16	2	RW
30	59	adj. PLC output 1 (Pin 2)	*43*	NOK result math 4	U16	2	RW
30	59	adj. PLC output 1 (Pin 2)	*44*	NOK result math 5	U16	2	RW
30	59	adj. PLC output 1 (Pin 2)	*45*	NOK result math 6	U16	2	RW
30	59	adj. PLC output 1 (Pin 2)	*46*	NOK channel Y1	U16	2	RW
30	59	adj. PLC output 1 (Pin 2)	*47*	NOK channel Y2	U16	2	RW
30	59	adj. PLC output 1 (Pin 2)	*48*	NOK rotary switch 1	U16	2	RW
30	59	adj. PLC output 1 (Pin 2)	*49*	NOK rotary switch 2	U16	2	RW
30	59	adj. PLC output 1 (Pin 2)	*50*	PC logging active (OUT_PC_LOGGING)	U16	2	RW
30	59	adj. PLC output 1 (Pin 2)	*51*	Reference measurement	U16	2	RW
30	59	adj. PLC output 1 (Pin 2)	*52*	A5 (switch program.) (only if 128 MP)	U16	2	RW
30	59	adj. PLC output 1 (Pin 2)	*53*	A6 (switch program) (only if 128 MP)	U16	2	RW
30	59	adj. PLC output 1 (Pin 2)	*54*	OK channel Y1	U16	2	RW
30	59	adj. PLC output 1 (Pin 2)	*55*	OK channel Y2	U16	2	RW

Slot 30, Indices 60 to 81 (Assignment adjustable PLC outputs 2 to 23)

Slot	Index	Description	Value	Meaning of value	Type	Len	R/W
30	60	adj. PLC output 2 (Pin 6)	*see slot 59*		U16	2	RW
30	61	adj. PLC output 3 (Pin 8)	*see slot 59*		U16	2	RW
30	62	adj. PLC output 4 (Pin 9)	*see slot 59*		U16	2	RW
30	63	adj. PLC output 5 (Pin 10)	*see slot 59*		U16	2	RW
30	64	adj. PLC output 6 (Pin 11)	*see slot 59*		U16	2	RW

Slot	Index	Description	Value	Meaning of value	Type	Len	R/W
30	65	adj. PLC output 7 (Pin 12)	*see slot 59*		U16	2	RW
30	66	adj. PLC output 8 (Pin 13)	*see slot 59*		U16	2	RW
30	67	adj. PLC output 9 (Pin 16)	*see slot 59*		U16	2	RW
30	68	adj. PLC output 10 (Pin 17)	*see slot 59*		U16	2	RW
30	69	adj. PLC output 11 (Pin 21)	*see slot 59*		U16	2	RW
30	70	adj. PLC output 12 (Pin 22)	*see slot 59*		U16	2	RW
30	71	adj. PLC output 13 (Pin 23)	*see slot 59*		U16	2	RW
30	72	adj. PLC output 14 (Pin 24)	*see slot 59*		U16	2	RW
30	73	adj. PLC output 15 (Pin 25)	*see slot 59*		U16	2	RW
30	74	adj. PLC output 16 (Pin 26)	*see slot 59*		U16	2	RW
30	75	adj. PLC output 17 (Pin 27)	*see slot 59*		U16	2	RW
30	76	adj. PLC output 18 (Pin 28)	*see slot 59*		U16	2	RW
30	77	adj. PLC output 19 (Pin 29)	*see slot 59*		U16	2	RW
30	78	adj. PLC output 20 (Pin 30)	*see slot 59*		U16	2	RW
30	79	adj. PLC output 21 (Pin 31)	*see slot 59*		U16	2	RW
30	80	adj. PLC output 22 (Pin 32)	*see slot 59*		U16	2	RW
30	81	adj. PLC output 23 (Pin 33)	*see slot 59*		U16	2	RW

Slot 30, Indices 82 to 115

Slot	Index	Description	Value	Meaning of value	Type	Len	R/W
30	82	Order sheet: Operator	*Michael_ Mueller*		STR 64	64	RW
30	83	Order sheet: Order number	*AN_123456*		STR 64	64	RW
30	84	Order sheet: Batch	*BATCH_ 257-3*		STR 64	64	RW
30	85	Order sheet: Component	*Cylinder_right*		STR 64	64	RW
30	86	Order sheet: Serial number 1	*SN_12345678 9*		STR 64	64	RW
30	87	Order sheet: Serial number 2	*SN_98765432 1*		STR 64	64	RW
30	88	Order sheet: Shift number	*1 … 6*		U16	2	RW
30	89	Order sheet: Shift name Current shift	*Shiftname_ Current_Shift*		STR 64	64	RW

Slot	Index	Description	Value	Meaning of value	Type	Len	R/W
30	90	Order sheet: Shift name Shift 1	*Shiftname_ Shift1*		STR 64	64	RW
30	91	Order sheet: Shift name Shift 2	*Shiftname_ Shift2*		STR 64	64	RW
30	92	Order sheet: Shift name Shift 3	*Shiftname_ Shift3*		STR 64	64	RW
30	93	Order sheet: Shift name Shift 4	*Shiftname_ Shift4*		STR 64	64	RW
30	94	Order sheet: Shift name Shift 5	*Shiftname_ Shift5*		STR 64	64	RW
30	95	Order sheet: Shift name Shift 6	*Shiftname_ Shift6*		STR 64	64	RW
30	96	Order sheet: Reset shift counter Shift selection through writing the shift number	*Shift number*	EVENT! Writing the shift number clears the shift counter concerned	U16	2	WO
30	97	Order sheet: Shift counter read-out quantity of current shift	*0 … 4294967296*		U32	4	RO
30	98	Order sheet: Shift counter read-out quantity of shift 1	*0 … 4294967296*		U32	4	RO
30	99	Order sheet: Shift counter read-out quantity of shift 2	*0 … 4294967296*		U32	4	RO
30	100	Order sheet: Shift counter read-out quantity of shift 3	*0 … 4294967296*		U32	4	RO
30	101	Order sheet: Shift counter read-out quantity of shift 4	*0 … 4294967296*		U32	4	RO
30	102	Order sheet: Shift counter read-out quantity of shift 5	*0 … 4294967296*		U32	4	RO
30	103	Order sheet: Shift counter read-out quantity of shift 6	*0 … 4294967296*		U32	4	RO
30	104	Order sheet: Shift counter read-out quantity of current NOK counts	*0 … 4294967296*		U32	4	RO
30	105	Order sheet: Shift counter read-out quantity of NOK counts shift 1	*0 … 4294967296*		U32	4	RO
30	106	Order sheet: Shift counter read-out quantity of NOK counts shift 2	*0 … 4294967296*		U32	4	RO
30	107	Order sheet: Shift counter read-out quantity of NOK counts shift 3	*0 … 4294967296*		U32	4	RO

Slot	Index	Description	Value	Meaning of value	Type	Len	R/W
30	108	Order sheet: Shift counter read-out quantity of NOK counts shift 4	*0 … 4294967296*		U32	4	RO
30	109	Order sheet: Shift counter read-out quantity of NOK counts shift 5	*0 … 4294967296*		U32	4	RO
30	110	Order sheet: Shift counter read-out quantity of NOK counts shift 6	*0 … 4294967296*		U32	4	RO
30	111	Acknowledgement function on/off	*0* *1*	Acknowledgement function off Acknowledgement function on	U16	2	RW
30	112	Acknowledgement function: Acknowledge OK parts on/off	*0* *1*	Not active User has to confirm OK parts (F-Key or PLC input)	U16	2	RW
30	113	Acknowledgement function: Acknowledge NOK parts on/off	*0* *1*	Not active User has to confirm NOK parts (F-Key or PLC input)	U16	2	RW
30	114	Acknowledgement function: Buzzer volume	*0 ... 10*	10: max. volume	U16	2	RW
30	115	Update display (refresh view)	*Event!*	Writing an arbitrary byte initiates action	U8	1	WO

9.1.2 Communication: Change menu, display update, fault indication (Slot 32)

Slot	Index	Description	Value	Meaning of value	Type	Len	R/W
32	0	Not possible	-	-	x	x	x
32	1 - 9	Reserved	-	-	x	x	x
32	10	Go to menu	*0* *1* *2*	Meas. Menu Graphical test menu Complex test menu EVENT! and entry	U16x	2	WO
32	11	Initiate update of the LCD display	*EVENT!*	Writing an arbitrary byte initiates action	U8x	1	WO
32	12	Device fault status	*0x00000001*	PREFIX addressing fault	U32x	4	RO
			0x00000002	Enquiry received in Device mode	U32x	4	RO
			0x00000004	Blockcheck error	U32x	4	RO
			0x00000008	Command fault	U32x	4	RO
			0x00000010	Parameter error	U32x	4	RO

Slot	Index	Description	Value	Meaning of value	Type	Len	R/W
			0x00000020	Timeout Receive Timer	U32x	4	RO
			0x00000040	Timeout Response Timer	U32x	4	RO
			0x00000080	Invalid ! or ?	U32x	4	RO
			0x00000100	Invalid configuration	U32x	4	RO
			0x00000200	Scaling fault	U32x	4	RO
			0x00000400	No valid measurements are available	U32x	4	RO
			0x00000800	A/D converter overdriven	U32x	4	RO
			0x00001000	Fault reading from EEPROM	U32x	4	RO
			0x00002000	Overdrive resulting from scaling	U32x	4	RO
			0x00004000	Reading out the measurement curve was interrupted by the beginning of a new measurement	U32x	4	RO
			0x00008000	Invalid envelope limits	U32x	4	RO
			0x00010000	The calibration has not worked	U32x	4	RO

9.1.3 Minimal setup menu (Slot 33)

Slot	Index	Description	Value	Meaning of value	Type	Len	R/W
33	0	Not possible	-	-	x	x	x
33	1 - 9	Reserved	-	-	x	x	x
33	10	Set program number	*0 ... 31* *0…127*	In the standard device In the corresponding device version	U16	2	RW
33	11	Program name	*Program name*		STR 20	20	RW
33	12	Reset statistics of a measurement program	*0 ... 31* *0…127*	In the standard device In the corresponding device version EVENT! Selection through writing the program number	U16	2	WO
33	13	Reset statistics in all measurement programs	*EVENT!*	Writing an arbitrary byte initiates action	U8	1	WO

9.1.4 General channel settings (Slot 34)

Slot	Index	Description	Value	Meaning of value	Type	Len	R/W
34	0	Not possible	-	-			X
34	1 - 9	Reserved	-	-			X

Slot	Index	Description	Value	Meaning of value	Type	Len	R/W
34	10	Channel settings channel X **Note**: First make the settings in indices 10, 11, 12, then initiate with index 13!		Terminals:	U16	2	RW
			0	A, strain gauge			
			1	A, Potentiometer			
			2	A, standard signal			
			3	B, strain gauge			
			4	B, Potentiometer			
			5	B, standard signal			
			6	C, Incr. TTL			
			7	C, Incr. sinus 1Vpp			
			8	C, Incr. sinus 11 uApp			
			9	D, strain gauge			
			10	D, Potentiometer			
			11	D, standard signal			
			12	D, Incr. TTL			
			13	E, resistance			
			14	F, Piezo			
			15	time			
			16	reserved			
			17	C, SSI			
			18	C, EnDat			

Slot	Index	Description	Value	Meaning of value	Type	Len	R/W
34	11	Channel settings channel Y1 **Note**: First make the settings in indices 10, 11, 12, then initiate with index 13!	 *0* *1* *2* *3* *4* *5* *6* *7* *8* *9* *10* *11* *12* *13* *14* *15* *16* *17* *18*	Terminals: A, strain gauge A, Potentiometer A, standard signal B, strain gauge B, Potentiometer B, standard signal C, Incr. TTL C, Incr.sinus 1Vpp C, Incr. sinus 11 uApp D, strain gauge D, Potentiometer D, standard signal D, Incr. TTL E, resistance F, Piezo time reserved C, SSI C, EnDat	U16	2	RW
34	12	Channel settings channel Y2 **Note**: First make the settings in indices 10, 11, 12, then initiate with index 13!	 *0* *1* *2* *3* *4* *5* *6* *7* *8* *9* *10* *11* *12* *13* *14* *15* *16* *17* *18*	Terminals: A, strain gauge A, Potentiometer A, standard signal B, strain gauge B, Potentiometer B, standard signal C, Incr. TTL C, Incr. sinus 1Vpp C, Incr. sinus 11 uApp D, strain gauge D, Potentiometer D, standard signal D, Incr. TTL E, resistance F, Piezo Time off C, SSI C, EnDat	U16	2	RW
34	13	Accept channel settings	*Event!*	The settings from indices 10, 11, 12 are being stored. Writing an arbitrary byte initiates action.	U8	1	WO
34	14	Filter channel X **Note**: Entry is not available for the channel settings "Time" and "Incremental".	*0* *1* *2* *3* *4* *5* *6* *7* *8*	Off 5 Hz filter 10 Hz filter 25 Hz filter 50 Hz filter 100 Hz filter 200 Hz filter 400 Hz filter 800 Hz filter	U16	2	RW

Slot	Index	Description	Value	Meaning of value	Type	Len	R/W
34	15	Filter channel Y1 **Note**: Entry is not available for the channel settings "Time" and "Incremental".	*0* *1* *2* *3* *4* *5* *6* *7* *8*	Off 5 Hz filter 10 Hz filter 25 Hz filter 50 Hz filter 100 Hz filter 200 Hz filter 400 Hz filter 800 Hz filter	U16	2	RW
34	16	Filter channel Y2 **Note**: Entry is not available for the channel settings "Time" and "Incremental"	*0* *1* *2* *3* *4* *5* *6* *7* *8*	Off 5 Hz filter 10 Hz filter 25 Hz filter 50 Hz filter 100 Hz filter 200 Hz filter 400 Hz filter 800 Hz filter	U16	2	RW
34	17	Transmitter supply channel X **Note**: Entry is not available for the channel settings "Piezo" and "Resistance".	*0* *1*	Transmitter supply off Transmitter supply on	U16	2	RW
34	18	Transmitter supply channel Y1 **Note**: Entry is not available for the channel settings "Piezo" and "Resistance".	*0* *1*	Transmitter supply off Transmitter supply on	U16	2	RW
34	19	Transmitter supply channel Y2 **Note**: Entry is not available for the channel settings "Piezo" and "Resistance".	*0* *1*	Transmitter supply off Transmitter supply on	U16	2	RW

Slot	Index	Description	Value	Meaning of value	Type	Len	R/W
34	20	Set unit channel X **Note**: Entry is not available for the channel settings "Time" and "Resistance".	*0* *1* *2* *3* *4* *5* *6* *7* *8* *9* *10* *11* *12*	User defined unit 1 User defined unit 2 User defined unit 3 mm N kN Nm Ncm grd bar V s ms	U16	2	RW
34	21	Set unit channel Y1 **Note**: Entry is not available for the channel settings "Time" and "Resistance".	*0* *1* *2* *3* *4* *5* *6* *7* *8* *9* *10* *11* *12*	User defined unit 1 User defined unit 2 User defined unit 3 mm N kN Nm Ncm grd bar V s ms	U16	2	RW
34	22	Set unit channel Y2 **Note**: Entry is not available for the channel settings "Off", "Time" and "Resistance".	*0* *1* *2* *3* *4* *5* *6* *7* *8* *9* *10* *11* *12*	User defined unit 1 User defined unit 2 User defined unit 3 mm N kN Nm Ncm grd bar V s ms	U16	2	RW
34	23	Set user defined unit 1	*abcd*		STR 4	4	RW
34	24	Set user defined unit 2	*abcd*		STR 4	4	RW
34	25	Set user defined unit 3	*ijkl*		STR 4	4	RW
34	26	Take the tare value for channel X and return the measured value **Note**: Entry is not available for the channel settings "Time", "Incremental" and "Resistance".	*EVENT!*		FLT	4	RO

Slot	Index	Description	Value	Meaning of value	Type	Len	R/W
34	27	Take the tare value for channel Y1 and return the measured value **Note**: Entry is not available for the channel settings "Time", "Incremental" and "Resistance".	*EVENT!*		FLT	4	RO
34	28	Take the tare value for channel Y2 and return the measured value **Note**: Entry is not available for the channel settings "Time", "Incremental" and "Resistance".	*EVENT!*		FLT	4	RO
34	29	Channel to be scaled	*0* *1* *2*	Channel X Channel Y1 Channel Y2	U 16	2	WO
34	30	Lower scale value		Concerns the channel selected under index 29	FLT	4	RW
34	31	Upper scale value		Concerns the channel selected under index 29	FLT	4	RW
34	32	Lower calibration value		Concerns the channel selected under index 29	FLT	4	RW
34	33	Upper calibration value		Concerns the channel selected under index 29	FLT	4	RW
34	34	Perform scaling (as per index 29 ... 33)	*EVENT*	Entry is not available for the channel settings "Off", "Time", "Incremental" and "Resistance".	U8	1	WO

9.1.5 Channel settings “Potentiometer” (Slot 35)

Slot	Index	Description	Value	Meaning of value	Type	Len	R/W
35	0	Not possible	-	-			X
35	1 - 9	Reserved	-	-			X
35	10	Potentiometer excitation channel X	*0* *1*	5 V excitation 10 V excitation	U16	2	RW
35	11	Potentiometer excitation channel Y1	*0* *1*	5 V excitation 10 V excitation	U16	2	RW
35	12	Potentiometer excitation channel Y2	*0* *1*	5 V excitation 10 V excitation	U16	2	RW

9.1.6 Channel settings “Standard signal” (Slot 36)

Slot	Index	Description	Value	Meaning of value	Type	Len	R/W
36	0	Not possible	-	-			X
36	1 - 9	Reserved	-	-			X
36	10	Standard signal input channel X	*0* *1*	5 V input range 10 V input range	U16	2	RW
36	11	Standard signal input channel Y1	*0* *1*	5 V input range 10 V input range	U16	2	RW
36	12	Standard signal input channel Y2	*0* *1*	5 V input range 10 V input range	U16	2	RW

9.1.7 Channel settings “Strain gauge” (Slot 37)

Slot	Index	Description	Value	Meaning of value	Type	Len	R/W
37	0	Not possible	-	-			X
37	1 - 9	Reserved	-	-			X
37	10	Strain gauge excitation channel X	*0* *1* *2*	2.5 V excitation 5 V excitation 10 V excitation	U16	2	RW
37	11	Strain gauge excitation channel Y1	*0* *1* *2*	2.5 V excitation 5 V excitation 10 V excitation	U16	2	RW
37	12	Strain gauge excitation channel Y2	*0* *1* *2*	2.5 V excitation 5 V excitation 10 V excitation	U16	2	RW
37	13	Strain gauge input range channel X	*0* *1* *2* *3* *4* *5*	1 mV/V input range 2 mV/V input range 4 mV/V input range 10 mV/V input range 20 mV/V input range 40 mV/V input range (40 mV/V are not allowed at 10 V excitation)	U16	2	RW
37	14	Strain gauge input range channel Y1	*0* *1* *2* *3* *4* *5*	1 mV/V input range 2 mV/V input range 4 mV/V input range 10 mV/V input range 20 mV/V input range 40 mV/V input range (40 mV/V are not allowed at 10 V excitation)	U16	2	RW
37	15	Strain gauge input range channel Y2	*0* *1* *2* *3* *4* *5*	1 mV/V input range 2 mV/V input range 4 mV/V input range 10 mV/V input range 20 mV/V input range 40 mV/V input range (40 mV/V are not allowed at 10 V excitation	U16	2	RW

Slot	Index	Description	Value	Meaning of value	Type	Len	R/W
37	16	Strain gauge sensitivity channel X	*0.01 ... 100.0*	IEEE754 Float	FLT	4	RW
37	17	Strain gauge sensitivity channel Y1	*0.01 ... 100.0*	IEEE754 Float	FLT	4	RW
37	18	Strain gauge sensitivity channel Y2	*0.01 ... 100.0*	IEEE754 Float	FLT	4	RW
37	19	Level (elect.) strain gauge channel X	*0.01 ... 100.0*	IEEE754 Float	FLT	4	RO
37	20	Level (elect.) strain gauge channel Y1	*0.01 ... 100.0*	IEEE754 Float	FLT	4	RO
37	21	Level (elect.) strain gauge channel Y2	*0.01 ... 100.0*	IEEE754 Float	FLT	4	RO
37	22	Strain gauge shunt channel X	*0* *1* *2* *3* *4* *5*	OFF 10 kOhm 59 kOHM 80 kOHM 100 kOHM 300 kOHM	U16	2	RW
37	23	Strain gauge shunt channel Y1	*0* *1* *2* *3* *4* *5*	OFF 10 kOhm 59 kOHM 80 kOHM 100 kOHM 300 kOHM	U16	2	RW
37	24	Strain gauge shunt channel Y2	*0* *1* *2* *3* *4* *5*	OFF 10 kOhm 59 kOHM 80 kOHM 100 kOHM 300 kOHM	U16	2	RW

9.1.8 Channel settings “Resistance” (Slot 38)

Slot	Index	Description	Value	Meaning of value	Type	Len	R/W
38	0	Not possible	-	-			X
38	1 - 9	Reserved	-	-			X
38	10	Resistance input range channel X	*0* *1* *2*	200 mOhm range 2 kOhm range 100 kOhm range	U16	2	RW
38	11	Resistance input range channel Y1	*0* *1* *2*	200 mOhm range 2 kOhm range 100 kOhm range	U16	2	RW
38	12	Resistance input range channel Y2	*0* *1* *2*	200 mOhm range 2 kOhm range 100 kOhm range	U16	2	RW

9.1.9 Channel settings “Piezo” (Slot 39)

Slot	Index	Description	Value	Meaning of value	Type	Len	R/W
39	0	Not possible	-	-			X
39	1 - 9	Reserved	-	-			X
39	10	Piezo input range channel X	*0* *1* *2* *3* *4* *5* *6* *7* *8* *9*	1nC range 2nC range 5nC range 10nC range 20nC range 40nC range 80nC range 200nC range 400nC range 1uC range	U16	2	RW
39	11	Piezo input range channel Y1	*0* *1* *2* *3* *4* *5* *6* *7* *8* *9*	1nC range 2nC range 5nC range 10nC range 20nC range 40nC range 80nC range 200nC range 400nC range 1uC range	U16	2	RW
39	12	Piezo input range channel Y2	*0* *1* *2* *3* *4* *5* *6* *7* *8* *9*	1nC range 2nC range 5nC range 10nC range 20nC range 40nC range 80nC range 200nC range 400nC range 1uC range	U16	2	RW

Slot	Index	Description	Value	Meaning of value	Type	Len	R/W
39	13	Piezo short-circuit on/to channel X	*0* *1*	Do not short-circuit piezo input Short-circuit piezo input	U16	2	WO
39	14	Piezo short-circuit on/to channel Y1	*0* *1*	Do not short-circuit piezo input Short-circuit piezo input	U16	2	WO
39	15	Piezo short-circuit on/to channel Y2	*0* *1*	Do not short-circuit piezo input Short-circuit piezo input	U16	2	WO

9.1.10 Channel settings “Incremental” (Slot 40)

Slot	Index	Description	Value	Meaning of value	Type	Len	R/W
40	0	Not possible	-	-			X
40	1 - 9	Reserved	-	-			X
40	10	Incremental reference mark channel X	*0* *1* *2*	reference mark off reference mark on reference mark distance coded	U16	2	RW
40	11	Incremental reference mark channel Y1	*0* *1* *2*	reference mark off reference mark on reference mark distance coded	U16	2	RW
40	12	Incremental reference mark channel Y2	*0* *1* *2*	reference mark off reference mark on reference mark distance coded	U16	2	RW
40	13	Incremental set value at reference mark channel X	*between - 9999999.0 and 9999999.0*	Float value, Float according to IEEE754	FLT	4	RW
40	14	Incremental set value at reference mark channel Y1	*between - 9999999.0 and 9999999.0*	Float value, Float according to IEEE754	FLT	4	RW
40	15	Incremental set value at reference mark channel Y2	*between - 9999999.0 and 9999999.0*	Float value, Float according to IEEE754	FLT	4	RW
40	16	Incremental reference measurement on/off channel X	*0* *1*	off on	U16	2	RW
40	17	Incremental reference measurement on/off channel Y1	*0* *1*	off on	U16	2	RW
40	18	Incremental reference measurement on/off channel Y2	*0* *1*	off on	U16	2	RW
40	19	Incremental Set to value at start off/on channel X	*0* *1*	on off	U16	2	RW
40	20	Incremental Set to value at start off/on channel Y1	*0* *1*	on off	U16	2	RW

Slot	Index	Description	Value	Meaning of value	Type	Len	R/W
40	21	Incremental Set to value at start off/on channel Y2	*0* *1*	on off	U16	2	RW
40	22	Incremental set value at start channel X	*between* *- 9999999.0* *and* *9999999.0*	Float value, Float according to IEEE754	FLT	4	RW
40	23	Incremental set value at start channel Y1	*between* *- 9999999.0* *and* *9999999.0*	Float value, Float according to IEEE754	FLT	4	RW
40	24	Incremental set value at start channel Y2	*between* *- 9999999.0* *and* *9999999.0*	Float value, Float according to IEEE754	FLT	4	RW
40	25	Incremental nominal increment channel X	*between* *- 9999999.0* *and* *9999999.0*	Float value, Float according to IEEE754	FLT	4	RW
40	26	Incremental nominal increment channel Y1	*between* *- 9999999.0* *and* *9999999.0*	Float value, Float according to IEEE754	FLT	4	RW
40	27	Incremental nominal increment channel Y2	*between* *- 9999999.0* *and* *9999999.0*	Float value, Float according to IEEE754	FLT	4	RW
40	28	Incremental grating period channel X	*between* *- 9999999.0* *and* *9999999.0*	Float value, Float according to IEEE754	FLT	4	RW
40	29	Incremental grating period channel Y1	*between* *- 9999999.0* *and* *9999999.0*	Float value, Float according to IEEE754	FLT	4	RW
40	30	Incremental grating period channel Y2	*between* *- 9999999.0* *and* *9999999.0*	Float value, Float according to IEEE754	FLT	4	RW
40	31	Incremental interpolation channel X	*between* *-1 and 65000*	Integer value	U16	2	RW
40	32	Incremental interpolation channel Y1	*between* *-1 and 65000*	Integer value	U16	2	RW
40	33	Incremental interpolation channel Y2	*between* *-1 and 65000*	Integer value	U16	2	RW
40	34	Incremental termination resistor off/on channel X	*0* *1*	off on	U16	2	RW

Slot	Index	Description	Value	Meaning of value	Type	Len	R/W
40	35	Incremental termination resistor off/on channel Y1	*0* *1*	off on	U16	2	RW
40	36	Incremental termination resistor off/on channel Y2	*0* *1*	off on	U16	2	RW
40	37	Direction of counting positive/negative channel X	*0* *1*	positive negative	U16	2	RW
40	38	Direction of counting positive/negative channel X1	*0* *1*	positive negative	U16	2	RW
40	39	Direction of counting positive/negative channel Y2	*0* *1*	positive negative	U16	2	RW

9.1.11 Channel settings “SSI” (Slot 41)

Slot	Index	Description	Value	Meaning of value	Type	Len	R/W
41	0	Not possible	-	-			X
41	1 .. 9	Reserved	-	-			X
41	10	SSI sensor type channel X **Note**: At the end, settings must be initiated through a write access to indices 37/38/39.	*0* *1* *2*	Displacement sensor Singleturn encoder Multiturn encoder	U16	2	RW
41	11	SSI sensor type channel Y1 **Note**: At the end, settings must be initiated through a write access to indices 37/38/39.	*0* *1* *2*	Displacement sensor Singleturn encoder Multiturn encoder	U16	2	RW
41	12	SSI sensor type channel Y2 **Note**: At the end, settings must be initiated through a write access to indices 37/38/39.	*0* *1* *2*	Displacement sensor Singleturn encoder Multiturn encoder	U16	2	RW

Slot	Index	Description	Value	Meaning of value	Type	Len	R/W
41	13	SSI code channel X **Note**: At the end, settings must be initiated through a write access to indices 37/38/39.	*0* *1*	Binary Gray code	U16	2	RW
41	14	SSI code channel Y1 **Note**: At the end, settings must be initiated through a write access to indices 37/38/39.	*0* *1*	Binary Gray code	U16	2	RW
41	15	SSI code channel Y2 **Note**: At the end, settings must be initiated through a write access to indices 37/38/39.	*0* *1*	Binary Gray code	U16	2	RW
41	16	SSI format channel X **Note**: Only permitted for multiturn angle sensor! At the end, settings must be initiated through a write access to indices 37/38/39.	*0* *1*	Right aligned Tree	U16	2	RW
41	17	SSI format channel Y1 Note: Only permitted for multiturn angle sensor! At the end, settings must be initiated through a write access to indices 37/38/39.	*0* *1*	Right aligned Tree	U16	2	RW
41	18	SSI format channel Y2 **Note**: Only permitted for multiturn angle sensor! At the end, settings must be initiated through a write access to indices 37/38/39.	*0* *1*	Right aligned Tree	U16	2	RW

Slot	Index	Description	Value	Meaning of value	Type	Len	R/W
41	19	SSI parity channel X **Note**: At the end, settings must be initiated through a write access to indices 37/38/39.	*0* *1*	off even	U16	2	RW
41	20	SSI parity channel Y1 **Note**: At the end, settings must be initiated through a write access to indices 37/38/39.	*0* *1*	off even	U16	2	RW
41	21	SSI parity channel Y2 **Note**: At the end, settings must be initiated through a write access to indices 37/38/39.	*0* *1*	off even	U16	2	RW
41	22	SSI clock frequency channel X **Note**: At the end, settings must be initiated through a write access to indices 37/38/39.	*0* *1* *2*	100 kHz 200 kHz 1 MHz	U16	2	RW
41	23	SSI clock frequency channel Y1 **Note**: At the end, settings must be initiated through a write access to indices 37/38/39.	*0* *1* *2*	100 kHz 200 kHz 1 MHz	U16	2	RW
41	24	SSI clock frequency channel Y2 **Note**: At the end, settings must be initiated through a write access to indices 37/38/39.	*0* *1* *2*	100 kHz 200 kHz 1 MHz	U16	2	RW

Slot	Index	Description	Value	Meaning of value	Type	Len	R/W
41	25	SSI resolution channel X **Note**: Only permitted for displacement sensors! At the end, settings must be initiated through a write access to indices 37/38/39.	*between - 9999999.0 and 9999999.0*	Float value, Float according to IEEE754	FLT	4	RW
41	26	SSI resolution channel Y1 **Note**: Only permitted for displacement sensors! At the end, settings must be initiated through a write access to indices 37/38/39.	*between - 9999999.0 and 9999999.0*	Float value, Float according to IEEE754	FLT	4	RW
41	27	SSI resolution channel Y2 **Note**: Only permitted for displacement sensors! At the end, settings must be initiated through a write access to indices 37/38/39.	*between - 9999999.0 and 9999999.0*	Float value, Float according to IEEE754	FLT	4	RW
41	28	SSI total number of bits channel X **Note**: At the end, settings must be initiated through a write access to indices 37/38/39.	*0 ... 48*	Integer value	U16	2	RW
41	29	SSI total number of bits channel Y1 **Note**: At the end, settings must be initiated through a write access to indices 37/38/39.	*0 ... 48*	Integer value	U16	2	RW
41	30	SSI total number of bits channel Y2 **Note**: At the end, settings must be initiated through a write access to indices 37/38/39.	*0 ... 48*	Integer value	U16	2	RW

Slot	Index	Description	Value	Meaning of value	Type	Len	R/W
41	31	SSI bit number angle singleturn or displacement channel X **Note**: At the end, settings must be initiated through a write access to indices 37/38/39.	*0 ... 32*	Integer value	U16	2	RW
41	32	SSI bit number angle singleturn or displacement channel Y1 **Note**: At the end, settings must be initiated through a write access to indices 37/38/39.	*0 ... 32*	Integer value	U16	2	RW
41	33	SSI bit number angle singleturn or displacement channel Y2 **Note**: At the end, settings must be initiated through a write access to indices 37/38/39.	*0 ... 32*	Integer value	U16	2	RW
41	34	SSI bit number rotations for multiturn angle channel X **Note**: At the end, settings must be initiated through a write access to indices 37/38/39.	*0 ... 32*	Integer value	U16	2	RW
41	35	SSI bit number rotations for multiturn angle channel Y1 **Note**: At the end, settings must be initiated through a write access to indices 37/38/39.	*0 ... 32*	Integer value	U16	2	RW

Slot	Index	Description	Value	Meaning of value	Type	Len	R/W
41	36	SSI bit number rotations for multiturn angle channel Y2 **Note**: At the end, settings must be initiated through a write access to indices 37/38/39.	*0 ... 32*	Integer value	U16	2	RW
41	37	Check & initiate SSI settings channel X	*EVENT!*	Writing an arbitrary byte initiates action	U8	1	WO
41	38	Check & initiate SSI settings channel Y1	*EVENT!*	Writing an arbitrary byte initiates action	U8	1	WO
41	39	Check & initiate SSI settings channel Y2	*EVENT!*	Writing an arbitrary byte initiates action	U8	1	WO

9.1.12 Channel settings “EnDat” (Slot 42)

Slot	Index	Description	Value	Meaning of value	Type	Len	R/W
42	0	Not possible	-	-			X
42	1 .. 9	Reserved	-	-			X
42	10	Read-out EnDat sensor data channel X **Note**: At the end, settings must be initiated through a write access to index 16.	*EVENT!*	Writing an arbitrary byte initiates action	U8	1	WO
42	11	Read-out EnDat sensor data channel Y1 **Note**: At the end, settings must be initiated through a write access to index 17.	*EVENT!*	Writing an arbitrary byte initiates action	U8	1	WO
42	12	Read-out EnDat sensor data channel Y2 **Note**: At the end, settings must be initiated through a write access to index 18.	*EVENT!*	Writing an arbitrary byte initiates action	U8	1	WO
42	13	EnDat clock frequency channel X **Note**: At the end, settings must be initiated through a write access to index 16.	*0* *1* *2* *3*	100k Hz 200 kHz 1 MHz 2 MHz	U16	2	RW
42	14	EnDat clock frequency channel Y1 **Note**: At the end, settings must be initiated through a write access to index 17.	*0* *1* *2* *3*	100k Hz 200 kHz 1 MHz 2 MHz	U16	2	RW
42	15	EnDat clock frequency channel Y2 **Note**: At the end, settings must be initiated through a write access to index 18.	*0* *1* *2* *3*	100k Hz 200 kHz 1 MHz 2 MHz	U16	2	RW

Slot	Index	Description	Value	Meaning of value	Type	Len	R/W
42	16	Copy EnDat sensor setup channel X **Note**: Sensor data must be read beforehand, and the clock frequency must be set.	*EVENT!*	Writing an arbitrary byte initiates action	U8	1	WO
42	17	Copy EnDat sensor setup channel Y1 **Note**: Sensor data must be read beforehand, and the clock frequency must be set.	*EVENT!*	Writing an arbitrary byte initiates action	U8	1	WO
42	18	Copy EnDat sensor setup channel Y2 **Note**: Sensor data must be read beforehand, and the clock frequency must be set.	*EVENT!*	Writing an arbitrary byte initiates action	U8	1	WO
42	19	EnDat status channel X **Note**: See comment at the end of the slot.	*0* *1*	Ready Error	U16	2	RW
42	20	EnDat status channel Y1 **Note**: See comment at the end of the slot.	*0* *1*	Ready Error	U16	2	RW
42	21	EnDat status channel Y2 **Note**: See comment at the end of the slot.	*0* *1*	Ready Error	U16	2	RW
42	22	EnDat standard channel X **Note**: See comment at the end of the slot.	*0* *1*	EnDat 2.1 EnDat 2.2	U16	2	RW
42	23	EnDat standard channel Y1 **Note**: See comment at the end of the slot.	*0* *1*	EnDat 2.1 EnDat 2.2	U16	2	RW

Slot	Index	Description	Value	Meaning of value	Type	Len	R/W
42	24	EnDat standard channel Y2 **Note**: See comment at the end of the slot.	*0* *1*	EnDat 2.1 EnDat 2.2	U16	2	RW
42	25	EnDat name of sensor channel X **Note**: Only available with EnDat 2.2! See comment at the end of the slot.	*"angle z-axis"*		STR 20	20	RW
42	26	EnDat name of sensor channel Y1 **Note**: Only available with EnDat 2.2! See comment at the end of the slot.	*"angle z-axis"*		STR 20	20	RW
42	27	EnDat name of sensor channel Y2 **Note**: Only available with EnDat 2.2! See comment at the end of the slot.	*"angle z-axis"*		STR 20	20	RW
42	28	EnDat sensor serial number channel X **Note**: See comment at the end of the slot.	*SN12345678 90*		STR 20	20	RW
42	29	EnDat sensor serial number channel Y1 **Note**: See comment at the end of the slot.	*SN12345678 90*		STR 20	20	RW
42	30	EnDat sensor serial number channel Y2 **Note**: See comment at the end of the slot.	*SN12345678 90*		STR 20	20	RW
42	31	EnDat sensor type channel X **Note**: See comment at the end of the slot.	*0* *1* *2*	Displacement Singelturn encoder Multiturn encoder	U16	2	RW

Slot	Index	Description	Value	Meaning of value	Type	Len	R/W
42	32	EnDat sensor type channel Y1 **Note**: See comment at the end of the slot.	*0* *1* *2*	Displacement Singelturn encoder Multiturn encoder	U16	2	RW
42	33	EnDat sensor type channel Y2 **Note**: See comment at the end of the slot.	*0* *1* *2*	Displacement Singelturn encoder Multiturn encoder	U16	2	RW
42	34	EnDat total number of bits channel X **Note**: See comment at the end of the slot.	*0 ... 48*	Integer value	U16	2	RW
42	35	EnDat total number of bits channel Y1 **Note**: See comment at the end of the slot.	*0 ... 48*	Integer value	U16	2	RW
42	36	EnDat total number of bits channel Y2 **Note**: See comment at the end of the slot.	*0 ... 48*	Integer value	U16	2	RW
42	37	EnDat bit number displacement or angle singleturn channel X **Note**: See comment at the end of the slot.	*0 ... 32*	Integer value	U16	2	RW
42	38	EnDat bit number displacement or angle singleturn channel Y1 **Note**: See comment at the end of the slot.	*0 ... 32*	Integer value	U16	2	RW
42	39	EnDat bit number displacement or angle singleturn channel Y2 **Note**: See comment at the end of the slot.	*0 ... 32*	Integer value	U16	2	RW
42	40	EnDat bit number angle multiturn channel X **Note**: See comment at the end of the slot.	*0 ... 32*	Integer value	U16	2	RW

Slot	Index	Description	Value	Meaning of value	Type	Len	R/W
42	41	EnDat bit number angle multiturn channel Y1 **Note**: See comment at the end of the slot.	*0 ... 32*	Integer value	U16	2	RW
42	42	EnDat bit number angle multiturn channel Y2 **Note**: See comment at the end of the slot.	*0 ... 32*	Integer value	U16	2	RW
42	43	EnDat resolution channel X **Note**: See comment at the end of the slot.	*between -9999999.0 and 9999999.0*	Float value	FLT	4	RW
42	44	EnDat resolution channel Y1 **Note**: See comment at the end of the slot.	*between -9999999.0 and 9999999.0*	Float value	FLT	4	RW
42	45	EnDat resolution channel Y2 **Note**: See comment at the end of the slot.	*between -9999999.0 and 9999999.0*	Float value	FLT	4	RW
42	38	EnDat bit number displacement or angle singleturn channel Y1 **Note**: See comment at the end of the slot.	*0 ... 32*	Integer value	U16	2	RW
42	46	EnDat measuring length for displacement sensor channel X **Note**: See comment at the end of the slot.	*16-Bit-Integer value*		U16	2	RW
42	47	EnDat measuring length for displacement sensor channel Y1 **Note**: See comment at the end of the slot.	*16-Bit-Integer value*		U16	2	RW
42	48	EnDat measuring length for displacement sensor channel Y2 **Note**: See comment at the end of the slot.	*16-Bit-Integer value*		U16	2	RW

Slot	Index	Description	Value	Meaning of value	Type	Len	R/W
42	49	EnDat unit of measuring length channel X **Note**: See comment at the end of the slot.	*0* *1* *2* *3*	GP (grating period) µm (Micrometer) mm (Millimeter) m (Meter)	U16	2	RW
42	50	EnDat unit of measuring length channel Y1 **Note**: See comment at the end of the slot.	*0* *1* *2* *3*	GP (grating period) µm (Micrometer) mm (Millimeter) m (Meter)	U16	2	RW
42	51	EnDat unit of measuring length channel Y2 **Note**: See comment at the end of the slot.	*0* *1* *2* *3*	GP (grating period) µm (Micrometer) mm (Millimeter) m (Meter)	U16	2	RW
42	52	EnDat max. clock frequency channel X **Note**: Only available with EnDat 2.2! See comment at the end of the slot.	*16-Bit-Integer value*		U16	2	RW
42	53	EnDat max. clock frequency channel Y1 **Note**: Only available with EnDat 2.2! See comment at the end of the slot.	*16-Bit-Integer value*		U16	2	RW
42	54	EnDat max. clock frequency channel Y2 **Note**: Only available with EnDat 2.2! See comment at the end of the slot.	*16-Bit-Integer value*		U16	2	RW
42	55	Transmit EnDat manual sensor setup channel X **Note**: Sensor data must be entered beforehand into the indices 19 ... 54!	*EVENT!*	Writing an arbitrary byte initiates action	U8	1	WO

Slot	Index	Description	Value	Meaning of value	Type	Len	R/W
42	56	Transmit EnDat manual sensor setup channel Y1 **Note**: Sensor data must be entered beforehand into the indices 19 ... 54!	*EVENT!*	Writing an arbitrary byte initiates action	U8	1	WO
42	57	Transmit EnDat manual sensor setup channel Y2 **Note**: Sensor data must be entered beforehand into the indices 19 ... 54!	*EVENT!*	Writing an arbitrary byte initiates action	U8	1	WO

Slot	Index	Description	Value	Meaning of value	Type	Len	R/W
42	19 ... 54	Comment on slots 19 … 54: Reading these entries only makes sense if the data has been read from the sensor beforehand (indices 10, 11, 12) It is also possible to write sensor data here. A certain risk is hidden here: If data that is not appropriate for the sensor has been written, the results of the sensor measurements can no longer be read correctly! In cases of doubt, the data should not be written here manually, but should instead be read out of the sensor through indices 10/11/12. After all the sensor data for the channel concerned has been written, they still have to be transferred into the device through a write access to indices 55/56/57, and then adopted by the device's internal FPGA through write access to indices 16/17/18.					

9.1.13 Tare (Slot 43)

Slot	Index	Description	Value	Meaning of value	Type	Len	R/W
43	0	Not possible	-	-			X
43	1 .. 9	Reserved	-	-			X
43	10	Tare at meas. start channel X	*0* *1*	off on	U16	2	RW
43	11	Tare at meas. start channel Y1	*0* *1*	off on	U16	2	RW
43	12	Tare at meas. start channel Y2	*0* *1*	off on	U16	2	RW
43	13	Standard value for tare channel X	*between -9999999.0 and 9999999.0*	Float value, Float according to IEEE754	FLT	4	RW
43	14	Standard value for tare channel Y1	*between -9999999.0 and 9999999.0*	Float value, Float according to IEEE754	FLT	4	RW
43	15	Standard value for tare channel Y2	*between -9999999.0 and 9999999.0*	Float value, Float according to IEEE754	FLT	4	RW
43	16	Tare warning on/off channel X	*0* *1*	off on	U16	2	RW
43	17	Tare warning on/off channel Y1	*0* *1*	off on	U16	2	RW
43	18	Tare warning on/off channel Y2	*0* *1*	off on	U16	2	RW
43	19	Set tare warning limit channel X	*between 1.0 and 20.0*	Float value, Float according to IEEE754	FLT	4	RW
43	20	Set tare warning limit channel Y1	*between 1.0 and 20.0*	Float value Float according to IEEE754	FLT	4	RW
43	21	Set tare warning limit channel Y2	*between 1.0 and 20.0*	Float value Float according to IEEE754	FLT	4	RW
43	22	Tare channel X	*EVENT!*	Writing an arbitrary byte initiates action	U8	1	WO
43	23	Delete tare channel X	*EVENT!*	Writing an arbitrary byte initiates action	U8	1	WO
43	24	Tare channel Y1	*EVENT!*	Writing an arbitrary byte initiates action	U8	1	WO
43	25	Delete tare channel Y1	*EVENT!*	Writing an arbitrary byte initiates action	U8	1	WO
43	26	Tare channel Y2	*EVENT!*	Writing an arbitrary byte initiates action	U8	1	WO
43	27	Delete tare channel Y2	*EVENT!*	Writing an arbitrary byte initiates action	U8	1	WO

9.1.14 Measurement mode (Slot 44)

Slot	Index	Description	Value	Meaning of value	Type	Len	R/W
44	0	Not possible	-	-			X
44	1 .. 9	Reserved	-	-			X
44	10	X sampling off/on	*0* *1*	off on	U16	2	RW
44	11	X sample rate	*between 0.0 and 9999999.0*	Float value Float according to IEEE754	FLT	4	RW
44	12	Y1 sampling off/on	*0* *1*	off on	U16	2	RW
44	13	Y1 sample rate	*between 0.0 and 9999999.0*	Float value Float according to IEEE754	FLT	4	RW
44	14	Y2 sampling off/on	*0* *1*	off on	U16	2	RW
44	15	Y2 sample rate	*between 0.0 and 9999999.0*	Float value Float according to IEEE754	FLT	4	RW
44	16	Time sampling off/on	*0* *1*	off on	U16	2	RW
44	17	Time sample rate	*between 0.0 and 9999999.0*	Float value Float according to IEEE754	FLT	4	RW
44	18	Set reference of curve **Note**: "Underrun" is not permitted if the channel concerned is set to time.	*0* *1* *2* *3* *4* *5* *6* *7* *8* *9*	Absolute Final force Y1 reference line overrun Y1 reference line underrun Y1 trigger overrun Y1 trigger underrun Y2 reference line overrun (not allowed when channel Y2 is off) Y2 reference line underrun (not allowed when channel Y2 is off) Y2 trigger overrun (not allowed when channel Y2 is off) Y2 trigger underrun (not allowed when channel Y2 is off)	U16	2	RW
44	19	Set reference line Y1	*between -9999999.0 and 9999999.0*	Float value Float according to IEEE754	FLT	4	RW
44	20	Set reference line Y2	*between -9999999.0 and 9999999.0*	Float value Float according to IEEE754	FLT	4	RW

Slot	Index	Description	Value	Meaning of value	Type	Len	R/W
44	21	Set trigger line Y1	*between -9999999.0 and 9999999.0*	Float value Float according to IEEE754	FLT	4	RW
44	22	Set trigger line Y2	*between -9999999.0 and 9999999.0*	Float value Float according to IEEE754	FLT	4	RW
44	23	Pretrigger display on/off	*0* *1*	off on	U16	2	RW
44	24	Set return point	*0* *1* *2* *3*	XMIN XMAX YMIN YMAX	U16	2	RW
44	25	Set “Record curve to“	*0* *1*	Complete curve Up to return point	U16	2	RW
44	26	Set start mode	*0* *1* *2* *3* *4* *5* *6*	External X internal overrun X internal underrun Y1 internal overrun Y1 internal underrun Y2 internal overrun (not possible if Y2 is switched off) Y2 internal underrun (not possible if Y2 is switched off)	U16	2	RW
44	27	Set stop mode	*0* *1* *2* *3* *4* *5* *6* *7* *8*	External X internal overrun X internal underrun Y1 internal overrun Y1 internal underrun Timeout Defined number of measured values Y2 internal overrun (not possible if Y2 is switched off) Y2 internal underrun (not possible if Y2 is switched off)	U16	2	RW
44	28	Set X start value for internal start	*between -9999999.0 and 9999999.0*	Float value Float according to IEEE754	FLT	4	RW
44	29	Set Y1 start value for internal start	*between -9999999.0 and 9999999.0*	Float value Float according to IEEE754	FLT	4	RW
44	30	Set Y2 start value for internal start	*between -9999999.0 and 9999999.0*	Float value Float according to IEEE754	FLT	4	RW
44	31	Set X stop value for internal stop	*between -9999999.0 and 9999999.0*	Float value Float according to IEEE754	FLT	4	RW

Slot	Index	Description	Value	Meaning of value	Type	Len	R/W
44	32	Set Y1 stop value for internal stop	*between -9999999.0 and 9999999.0*	Float value Float according to IEEE754	FLT	4	RW
44	33	Set Y2 stop value for internal stop	*between -9999999.0 and 9999999.0*	Float value Float according to IEEE754	FLT	4	RW
44	34	Set the "stop" timeout value	*between 0 and 9999999.0*	Float value Float according to IEEE754	FLT	4	RW
44	35	Set the "stop" number of measured values	*0 bis 5000*	Integer value	U16	2	RW
44	36	Set bend-up factor	*between -9999999.0 and 9999999.0*	Float value Float according to IEEE754	FLT	4	RW

9.1.15 Evaluation window 1 (Slot 45)

Slot	Index	Description	Value	Meaning of value	Type	Len	R/W
45	0	Not possible	-	-			X
45	1 .. 9	Reserved	-	-			X
45	10	Window 1 off/on	*0* *1*	off on	U16	2	RW
45	11	Window 1 limit Xmin **Note**: At the end, entry must be adopted through index 15.	*between -9999999.0 and 9999999.0*	Float value Float according to IEEE754	FLT	4	RW
45	12	Window 1 limit Xmax **Note**: At the end, entry must be adopted through index 15.	*between -9999999.0 and 9999999.0*	Float value Float according to IEEE754	FLT	4	RW
45	13	Window 1 limit Ymin **Note**: At the end, entry must be adopted through index 15.	*between -9999999.0 and 9999999.0*	Float value Float according to IEEE754	FLT	4	RW
45	14	Window 1 limit Ymax **Note**: At the end, entry must be adopted through index 15.	*between -9999999.0 and 9999999.0*	Float value Float according to IEEE754	FLT	4	RW
45	15	Window 1 copy limit **Note**: Values entered into indices 11, 12, 13, 14 are adopted	*EVENT!*	Writing an arbitrary byte initiates action	U8	1	WO

Slot	Index	Description	Value	Meaning of value	Type	Len	R/W
45	16	Window 1 entry left **Note**: At the end, entry must be adopted through index 24.	*0* *1*	no yes	U16	2	RW
45	17	Window 1 entry right **Note**: At the end, entry must be adopted through index 24.	*0* *1*	no yes	U16	2	RW
45	18	Window 1 entry bottom **Note**: At the end, entry must be adopted through index 24.	*0* *1*	no yes	U16	2	RW
45	19	Window 1 entry top **Note**: At the end, entry must be adopted through index 24.	*0* *1*	no yes	U16	2	RW
45	20	Window 1 exit left **Note**: At the end, entry must be adopted through index 24.	*0* *1*	no yes	U16	2	RW
45	21	Window 1 exit right **Note**: At the end, entry must be adopted through index 24.	*0* *1*	no yes	U16	2	RW
45	22	Window 1 exit bottom **Note**: At the end, entry must be adopted through index 24.	*0* *1*	no yes	U16	2	RW
45	23	Window 1 exit top **Note**: At the end, entry must be adopted through index 24.	*0* *1*	no yes	U16	2	RW
45	24	Copy window entry/exit **Note**: Values entered into indices 16 - 23 are adopted	*EVENT!*	no yes	U8	1	WO
45	25	Window 1 evaluation	*0* *1*	off on	U16	2	RW
45	26	Window 1 curve segment for evaluation	*0* *1* *2*	Forward Return Complete curve	U16	2	RW

Slot	Index	Description	Value	Meaning of value	Type	Len	R/W
45	27	Window 1 online evaluation	*0* *1* *2* *3* *4*	Off left - right right - left bottom - top top - bottom	U16	2	RW
45	28	Window 1 online signal number	*1 or 2*		U16	2	RW
45	29	Window 1 Online signal level	*0* *1*	Low active High active	U16	2	RW
45	30	Window 1 "Evaluate only first passage"	*0* *1*	Evaluate all passages (like 9310) Evaluate only fist passage (like 9306)	U16	2	RW
45	31	Window 1 channel Y1/Y2	*1* *2*	Channel Y1 Channel Y2	U16	2	RW
45	32	Window 1 calculate bend in window	*0* *1*	no yes	U16	2	RW
45	33	Window 1 delta gradient for bend	*between 0.0 and 9999999.0*	Float value Float according to IEEE754	FLT	4	RW
45	34	Window 1 delta-Y for bend	*between 0.0 and 9999999.0*	Float value Float according to IEEE754	FLT	4	RW
45	35	Window 1 calculate absolute maximum	*0* *1*	no yes	U16	2	RW
45	36	Window 1 calculate absolute minimum	*0* *1*	no yes	U16	2	RW
45	37	Window 1 calculate local maximum	*0* *1*	no yes	U16	2	RW
45	38	Window 1 set delta-Y for local maximum	*between 0.0 and 9999999.0*	Float value Float according to IEEE754	FLT	4	RW
45	39	Window 1 set 1st local minimum	*0* *1*	no yes	U16	2	RW
45	40	Window 1 set delta-Y for local minimum	*between 0.0 and 9999999.0*	Float value Float according to IEEE754	FLT	4	RW
45	41	Window 1 calculate mean value	*0* *1*	no yes	U16	2	RW
45	42	Window 1 calculate gradient	*0* *1*	no yes	U16	2	RW
45	43	Window 1 calculate area under curve	*0* *1*	no yes	U16	2	RW

9.1.16 Evaluation window 2 (Slot 46)

Slot	Index	Description	Value	Meaning of value	Type	Len	R/W
46	0	Not possible	-	-			X
46	1 .. 9	Reserved	-	-			X
46	10 ...	See slot 45					

9.1.17 Evaluation window 3 (Slot 47)

Slot	Index	Description	Value	Meaning of value	Type	Len	R/W
47	0	Not possible	-	-			X
47	1 .. 9	Reserved	-	-			X
47	10 ...	See slot 45					

9.1.18 Evaluation window 4 (Slot 48)

Slot	Index	Description	Value	Meaning of value	Type	Len	R/W
48	0	Not possible	-	-			X
48	1 .. 9	Reserved	-	-			X
48	10 ...	See slot 45					

9.1.19 Evaluation window 5 (Slot 49)

Slot	Index	Description	Value	Meaning of value	Type	Len	R/W
49	0	Not possible	-	-			X
49	1 .. 9	Reserved	-	-			X
49	10 ...	See slot 45					

9.1.20 Evaluation window 6 (Slot 50)

Slot	Index	Description	Value	Meaning of value	Type	Len	R/W
50	0	Not possible	-	-			X
50	1 .. 9	Reserved	-	-			X
50	10 ...	See slot 45					

9.1.21 Evaluation window 7 (Slot 51)

Slot	Index	Description	Value	Meaning of value	Type	Len	R/W
51	0	Not possible	-	-			X
51	1 .. 9	Reserved	-	-			X
51	10 ...	See slot 45					

9.1.22 Evaluation window 8 (Slot 52)

Slot	Index	Description	Value	Meaning of value	Type	Len	R/W
52	0	Not possible	-	-			X
52	1 .. 9	Reserved	-	-			X
52	10 ...	See slot 45					

9.1.23 Evaluation window 9 (Slot 53)

Slot	Index	Description	Value	Meaning of value	Type	Len	R/W
53	0	Not possible	-	-			X
53	1 .. 9	Reserved	-	-			X
53	10 ...	See slot 45					

9.1.24 Evaluation window 10 (Slot 54)

Slot	Index	Description	Value	Meaning of value	Type	Len	R/W
54	0	Not possible	-	-			X
54	1 .. 9	Reserved	-	-			X
54	10 ...	See slot 45					

9.1.25 Evaluation trapezoid window X1 (Slot 55)

Slot	Index	Description	Value	Meaning of value	Type	Len	R/W
55	0	Not possible	-	-			X
55	1 .. 9	Reserved	-	-			X
55	10	Trapezoid X1 off/on	*0* *1*	off on	U16	2	RW
55	11	Trapezoid X1 limit Xmin	*between -9999999.0 and 9999999.0*	Float value Float according to IEEE754	FLT	4	RW

Slot	Index	Description	Value	Meaning of value	Type	Len	R/W
55	12	Trapezoid X1 limit Xmax **Note**: At the end, entry must be adopted through index 17.	*between -9999999.0 and 9999999.0*	Float value Float according to IEEE754	FLT	4	RW
55	13	Trapezoid X1 Y limit max left **Note**: At the end, entry must be adopted through index 17.	*between -9999999.0 and 9999999.0*	Float value Float according to IEEE754	FLT	4	RW
55	14	Trapezoid X1 Y limit max right **Note**: At the end, entry must be adopted through index 17.	*between -9999999.0 and 9999999.0*	Float value Float according to IEEE754	FLT	4	RW
55	15	Trapezoid X1 Y limit min left **Note**: At the end, entry must be adopted through index 17.	*between -9999999.0 and 9999999.0*	Float value Float according to IEEE754	FLT	4	RW
55	16	Trapezoid X1 Y limit min right **Note**: At the end, entry must be adopted through index 17.	*between -9999999.0 and 9999999.0*	Float value Float according to IEEE754	FLT	4	RW
55	17	Trapezoid X1 copy the limits **Note**: Values entered into indices 11 - 16 are adopted	*EVENT*	Writing an arbitrary byte initiates action	U8	1	WO
55	18	Trapezoid X1 entry left **Note**: At the end, entry must be adopted through index 22.	*0* *1*	no yes	U16	2	RW
55	19	Trapezoid X1 entry right **Note**: At the end, entry must be adopted through index 22.	*0* *1*	no yes	U16	2	RW
55	20	Trapezoid X1 exit left **Note**: At the end, entry must be adopted through index 22.	*0* *1*	no yes	U16	2	RW

Slot	Index	Description	Value	Meaning of value	Type	Len	R/W
55	21	Trapezoid X1 exit right Note: At the end, entry must be adopted through index 22.	*0* *1*	no yes	U16	2	RW
55	22	Trapezoid X1 copy entry/exit **Note**: Values entered into indices 16 - 21 are adopted.	*EVENT*	Writing an arbitrary byte initiates action	U8	1	WO
55	23	Trapezoid X1 evaluation	*0* *1*	off on	U16	2	RW
55	24	Trapezoid X1 curve segment for evaluation	*0* *1* *2*	Forward Return Complete curve	U16	2	RW
55	25	Trapezoid X1 "Evaluate only first passage"	*0* *1*	Evaluate all passages (like 9310) Evaluate only first passage (like 9306)	U16	2	RW
55	26	Trapezoid X1 channel Y1/Y2	*1* *2*	Channel Y1 Channel Y2	U16	2	RW

9.1.26 Evaluation trapezoid window X2 (Slot 56)

Slot	Index	Description	Value	Meaning of value	Type	Len	R/W
56	0	Not possible	-	-			X
56	1 .. 9	Reserved	-	-			X
56	10 ...	See slot 55					

9.1.27 Evaluation trapezoid window Y1 (Slot 57)

Slot	Index	Description	Value	Meaning of value	Type	Len	R/W
57	0	Not possible	-	-			X
57	1 .. 9	Reserved	-	-			X
57	10	Trapezoid Y1 off/on	*0* *1*	off on	U16	2	RW
57	11	Trapezoid Y1 limit Ymin	*between -9999999.0 and 9999999.0*	Float value Float according to IEEE754	FLT	4	RW
57	12	Trapezoid Y1 limit Ymax **Note**: At the end, entry must be adopted through index 17.	*between -9999999.0 and 9999999.0*	Float value Float according to IEEE754	FLT	4	RW

Slot	Index	Description	Value	Meaning of value	Type	Len	R/W
57	13	Trapezoid Y1 X limit min top **Note**: At the end, entry must be adopted through index 17.	*between -9999999.0 and 9999999.0*	Float value Float according to IEEE754	FLT	4	RW
57	14	Trapezoid Y1 X limit max top **Note**: At the end, entry must be adopted through index 17.	*between -9999999.0 and 9999999.0*	Float value Float according to IEEE754	FLT	4	RW
57	15	Trapezoid Y1 X limit min bottom **Note**: At the end, entry must be adopted through index 17.	*between -9999999.0 and 9999999.0*	Float value Float according to IEEE754	FLT	4	RW
57	16	Trapezoid Y1 X limit max bottom **Note**: At the end, entry must be adopted through index 17.	*between -9999999.0 and 9999999.0*	Float value Float according to IEEE754	FLT	4	RW
57	17	Trapezoid Y1 copy limits **Note**: Values entered into indices 11 - 16 are adopted	*EVENT*	Writing an arbitrary byte initiates action	U8	1	WO
57	18	Trapezoid Y1 entry bottom **Note**: At the end, entry must be adopted through index 22.	*0* *1*	no yes	U16	2	RW
57	19	Trapezoid Y1 entry top **Note**: At the end, entry must be adopted through index 22.	*0* *1*	no yes	U16	2	RW
57	20	Trapezoid Y1 exit bottom **Note**: At the end, entry must be adopted through index 22.	*0* *1*	no yes	U16	2	RW
57	21	Trapezoid Y1 exit top **Note**: At the end, entry must be adopted through index 22.	*0* *1*	no yes	U16	2	RW

Slot	Index	Description	Value	Meaning of value	Type	Len	R/W
57	22	Trapezoid Y1 copy entry/exit **Note**: Values entered into indices 16 - 21 are adopted	*EVENT*	Writing an arbitrary byte initiates action	U8	1	WO
57	23	Trapezoid Y1 evaluation	*0* *1*	off on	U16	2	RW
57	24	Trapezoid Y1 Curve segment for evaluation	*0* *1* *2*	Forward Return Complete curve	U16	2	RW
57	25	Trapezoid Y1 "Evaluate only first passage"	*0* *1*	Evaluate all passages (like 9310) Evaluate only first passages (like 9306)	U16	2	RW
57	26	Trapezoid Y1 channel Y1/Y2	*1* *2*	Channel Y1 Channel Y2	U16	2	RW

9.1.28 Evaluation trapezoid window Y2 (Slot 58)

Slot	Index	Description	Value	Meaning of value	Type	Len	R/W
58	0	Not possible	-	-			X
58	1 .. 9	Reserved	-	-			X
58	10 ...	See slot 57					

9.1.29 Evaluation threshold 1 (Slot 59)

Slot	Index	Description	Value	Meaning of value	Type	Len	R/W
59	0	Not possible	-	-			X
59	1 .. 9	Reserved	-	-			X
59	10	Threshold 1 off/on	*0* *1*	off on	U16	2	RW
59	11	Threshold 1 type of threshold	*0* *1*	Type X (vertical) Type Y (horizontal)	U16	2	RW
59	12	Threshold 1 position Type X: X value Type Y: Y value **Note**: At the end, entry must be adopted through index 15.	*between -9999999.0 and 9999999.0*	Float value Float according to IEEE754	FLT	4	RW
59	13	Threshold 1 limit For type X: Ymin For type Y: Xmin **Note**: At the end, entry must be adopted through index 15.	*between -9999999.0 and 9999999.0*	Float value Float according to IEEE754	FLT	4	RW

Slot	Index	Description	Value	Meaning of value	Type	Len	R/W
59	14	Threshold 1 limit For type X: Ymax For type Y: Xmax **Note**: At the end, entry must be adopted through index 15.	*between -9999999.0 and 9999999.0*	Float value Float according to IEEE754	FLT	4	RW
59	15	Threshold 1 copy position and limits **Note**: Values entered into indices 11 - 14 are adopted	*EVENT*	Writing an arbitrary byte initiates action	U8	1	WO
59	16	Threshold 1 passage Type X: left > right Type Y: bottom > top **Note**: At the end, entry must be adopted through index 18.	*0* *1*	no yes	U16	2	RW
59	17	Threshold 1 passage Type X: right > left Type Y: top > bottom **Note**: At the end, entry must be adopted through index 18.	*0* *1*	no yes	U16	2	RW
59	18	Threshold 1 Copy passage **Note**: Values entered into indices 16 - 17 are adopted	*EVENT*	Writing an arbitrary byte initiates action	U8	1	WO
59	19	Threshold 1 evaluation	*0* *1*	off on	U16	2	RW
59	20	Threshold 1 Curve segment for evaluation	*0* *1* *2*	Forward Return Complete curve	U16	2	RW
59	21	Threshold 1 "Evaluate only first passage"	*0* *1*	Evaluate all passages (like 9310) Evaluate only first passage (like 9306)	U16	2	RW
59	22	Threshold 1 Channel Y1/Y2	*1* *2*	Channel Y1 Channel Y2	U16	2	RW
59	23	Threshold 1 Calculate bend **Note**: Only for type Y	*0* *1*	no yes	U16	2	RW
59	24	Threshold 1 Delta gradient for bend	*between 0.0 and 9999999.0*	Float value Float according to IEEE754	FLT	4	RW

Slot	Index	Description	Value	Meaning of value	Type	Len	R/W
59	25	Threshold 1 Delta Y bend	*between 0.0 and 9999999.0*	Float value Float according to IEEE754	FLT	4	RW
59	26	Threshold 1 Calculate absolute maximum **Note**: Only for type Y	*0* *1*	no yes	U16	2	RW
59	27	Threshold 1 Calculate absolute minimum **Note**: Only for type Y	*0* *1*	no yes	U16	2	RW
59	28	Threshold 1 Calculate local maximum **Note**: Only for type Y	*0* *1*	no yes	U16	2	RW
59	29	Threshold 1 Delta Y local maximum	*between 0.0 and 9999999.0*	Float value Float according to IEEE754	FLT	4	RW
59	30	Threshold 1 Calculate local minimum **Note**: Only for type Y	*0* *1*	no yes	U16	2	RW
59	31	Threshold 1 Delta Y local minimum	*between 0.0 and 9999999.0*	Float value Float according to IEEE754	FLT	4	RW
59	32	Threshold 1 Calculate mean value **Note**: Only for type Y	*0* *1*	no yes	U16	2	RW
59	33	Threshold 1 Calculate gradient **Note**: Only for type Y	*0* *1*	no yes	U16	2	RW
59	34	Threshold 1 Calculate area **Note**: Only for type Y	*0* *1*	no yes	U16	2	RW

9.1.30 Evaluation threshold 2 (Slot 60)

Slot	Index	Description	Value	Meaning of value	Type	Len	R/W
60	0	Not possible	-	-			X
60	1 .. 9	Reserved	-	-			X
60	10 ...	See slot 59					

9.1.31 Evaluation threshold 3 (Slot 61)

Slot	Index	Description	Value	Meaning of value	Type	Len	R/W
61	0	Not possible	-	-			X
61	1 .. 9	Reserved	-	-			X
61	10 ...	See slot 59					

9.1.32 Evaluation threshold 4 (Slot 62)

Slot	Index	Description	Value	Meaning of value	Type	Len	R/W
62	0	Not possible	-	-			X
62	1 .. 9	Reserved	-	-			X
62	10 ...	See slot 59					

9.1.33 Evaluation envelope 1 (Slot 63 to 67)

Slot/index data on request

9.1.34 Evaluation envelope 2 (Slot 68 to 72)

Slot/index data on request

9.1.35 Evaluation rotary switch 1 (Slot 73)

Slot/index data on request

9.1.36 Evaluation rotary switch 2 (Slot 74)

Slot/index data on request

9.1.37 Evaluation mathematical functions (Slot 75)

Slot	Index	Description	Value	Meaning of value	Type	Len	R/W
75	0	Not possible	-	-			X
75	1 .. 9	Reserved	-	-			X
75	10	Math. function Constant 1	*between -9999999.0 and 9999999.0*	Float value Float according to IEEE754	FLT	4	RW
75	11	Math. function Constant 2	*between -9999999.0 and 9999999.0*	Float value Float according to IEEE754	FLT	4	RW

Slot	Index	Description	Value	Meaning of value	Type	Len	R/W
75	12	Math. function Constant 3	*between -9999999.0 and 9999999.0*	Float value Float according to IEEE754	FLT	4	RW
75	13	Math. function Constant 4	*between -9999999.0 and 9999999.0*	Float value Float according to IEEE754	FLT	4	RW
75	14	Math. function Constant 5	*between -9999999.0 and 9999999.0*	Float value Float according to IEEE754	FLT	4	RW
75	15	Math. function Constant 6	*between -9999999.0 and 9999999.0*	Float value Float according to IEEE754	FLT	4	RW
75	16	Math. function Constant 7	*between -9999999.0 and 9999999.0*	Float value Float according to IEEE754	FLT	4	RW
75	17	Math. function Constant 8	*between -9999999.0 and 9999999.0*	Float value Float according to IEEE754	FLT	4	RW
75	18	Math. function Constant 9	*between -9999999.0 and 9999999.0*	Float value Float according to IEEE754	FLT	4	RW
75	19	Math. function Constant 10	*between -9999999.0 and 9999999.0*	Float value Float according to IEEE754	FLT	4	RW
75	20	Math. function formula row 1 operand A **Note**: At the end, entry must be adopted through index 23.	*Integer value*	See operand table in appendix	U16	2	RW
75	21	Math. function formula row 1 operator **Note**: At the end, entry must be adopted through index 23.	*0* *1* *2* *3*	Sum up Subtract Multiply Divide	U16	2	RW
75	22	Math. function formula row 1 operand B **Note**: At the end, entry must be adopted through index 23.	*Integer value*	See operand table in appendix	U16	2	RW

Slot	Index	Description	Value	Meaning of value	Type	Len	R/W
75	23	Math. function Copy formula 1 **Note**: Values entered into indices 20 - 22 are adopted	*EVENT*	Writing an arbitrary byte initiates action	U8	1	WO
75	24	Math. function formula row 2 operand A **Note**: At the end, entry must be adopted through index 27.	*Integer value*	See operand table in appendix	U16	2	RW
75	25	Math. function formula row 2 Operator **Note**: At the end, entry must be adopted through index 27.	*0* *1* *2* *3*	Sum up Subtract Multiply Divide	U16	2	RW
75	26	Math. function formula row 2 operand B **Note**: At the end, entry must be adopted through index 27.	*Integer value*	See operand table in appendix	U16	2	RW
75	27	Math. function Copy formula 2 **Note**: Values entered into indices 24 - 26 are adopted	*EVENT*	Writing an arbitrary byte initiates action	U8	1	WO
75	28	Math. function formula row 3 operand A **Note**: At the end, entry must be adopted through index 31.	*Integer value*	See operand table in appendix	U16	2	RW
75	29	Math. function formula row 3 operator **Note**: At the end, entry must be adopted through index 31.	*0* *1* *2* *3*	Sum up Subtract Multiply Divide	U16	2	RW
75	30	Math. function formula row 3 operand B **Note**: At the end, entry must be adopted through index 31.	*Integer value*	See operand table in appendix	U16	2	RW

Slot	Index	Description	Value	Meaning of value	Type	Len	R/W
75	31	Math. function Copy formula 3 **Note**: Values entered into indices 28 - 30 are adopted.	*EVENT*	Writing an arbitrary byte initiates action	U8	1	WO
75	32	Math. function formula row 4 operand A **Note**: At the end, entry must be adopted through index 35.	*Integer value*	See operand table in appendix	U16	2	RW
75	33	Math. function formula row 4 operator **Note**: At the end, entry must be adopted through index 35.	*0* *1* *2* *3*	Sum up Subtract Multiply Divide	U16	2	RW
75	34	Math. function formula row 4 operand B **Note**: At the end, entry must be adopted through index 35.	*Integer value*	See operand table in appendix	U16	2	RW
75	35	Math. function Copy formula 4 **Note**: Values entered into indices 32 - 34 are adopted.	*EVENT*	Writing an arbitrary byte initiates action	U8	1	WO
75	36	Math. function formula row 5 operand A **Note**: At the end, entry must be adopted through index 39.	*Integer value*	See operand table in appendix	U16	2	RW
75	37	Math. function formula row 5 operator **Note**: At the end, entry must be adopted through index 39.	*0* *1* *2* *3*	Sum up Subtract Multiply Divide	U16	2	RW
75	38	Math. function formula row 5 operand B **Note**: At the end, entry must be adopted through index 39.	*Integer value*	See operand table in appendix	U16	2	RW

Slot	Index	Description	Value	Meaning of value	Type	Len	R/W
75	39	Math. function Copy formula 5 **Note**: Values entered into indices 36 - 38 are adopted.	*EVENT*	Writing an arbitrary byte initiates action	U8	1	WO
75	40	Math. function formula row 6 operand A **Note**: At the end, entry must be adopted through index 43.	*Integer value*	See operand table in appendix	U16	2	RW
75	41	Math. function formula row 6 operator **Note**: At the end, entry must be adopted through index 43.	*0* *1* *2* *3*	Sum up Subtract Multiply Divide	U16	2	RW
75	42	Math. function formula row 6 operand B **Note**: At the end, entry must be adopted through index 43.	*Integer value*	See operand table in appendix	U16	2	RW
75	43	Math. function Copy formula 6 **Note**: Values entered into indices 40 - 42 are adopted.	*EVENT*	Writing an arbitrary byte initiates action	U8	1	WO
75	44	Math. function formula row 7 operand A **Note**: At the end, entry must be adopted through index 47.	*Integer value*	See operand table in appendix	U16	2	RW
75	45	Math. function formula row 7 operator **Note**: At the end, entry must be adopted through index 47.	*0* *1* *2* *3*	Sum up Subtract Multiply Divide	U16	2	RW
75	46	Math. function formula row 7 operand B **Note**: At the end, entry must be adopted through index 47.	*Integer value*	See operand table in appendix	U16	2	RW

Slot	Index	Description	Value	Meaning of value	Type	Len	R/W
75	47	Math. function Copy formula 7 **Note**: Values entered into indices 44 - 46 are adopted.	*EVENT*	Writing an arbitrary byte initiates action	U8	1	WO
75	48	Math. function formula row 8 operand A **Note**: At the end, entry must be adopted through index 51.	*Integer value*	See operand table in appendix	U16	2	RW
75	49	Math. function formula row 8 operator **Note**: At the end, entry must be adopted through index 51.	*0* *1* *2* *3*	Sum up Subtract Multiply Divide	U16	2	RW
75	50	Math. function formula row 8 operand B **Note**: At the end, entry must be adopted through index 51.	*Integer value*	See operand table in appendix	U16	2	RW
75	51	Math. function Copy formula 8 **Note**: Values entered into indices 48 - 50 are adopted.	*EVENT*	Writing an arbitrary byte initiates action	U8	1	WO
75	52	Math. function formula row 9 operand A **Note**: At the end, entry must be adopted through index 55.	*Integer value*	See operand table in appendix	U16	2	RW
75	53	Math. function formula row 9 operator **Note**: At the end, entry must be adopted through index 55.	*0* *1* *2* *3*	Sum up Subtract Multiply Divide	U16	2	RW
75	54	Math. function formula row 9 operand B **Note**: At the end, entry must be adopted through index 55.	*Integer value*	See operand table in appendix	U16	2	RW

Slot	Index	Description	Value	Meaning of value	Type	Len	R/W
75	55	Math. function Copy formula 9 **Note**: Values entered into indices 52 - 54 are adopted.	*EVENT*	Writing an arbitrary byte initiates action	U8	1	WO
75	56	Math. function formula row 10 operand A **Note**: At the end, entry must be adopted through index 59.	*Integer value*	See operand table in appendix	U16	2	RW
75	57	Math. function formula row 10 operator **Note**: At the end, entry must be adopted through index 59.	*0* *1* *2* *3*	Sum up Subtract Multiply Divide	U16	2	RW
75	58	Math. function formula row 10 operand B **Note**: At the end, entry must be adopted through index 59.	*Integer value*	See operand table in appendix	U16	2	RW
75	59	Math. function Copy formula 10 **Note**: Values entered into indices 56 - 58 are adopted.	*EVENT*	Writing an arbitrary byte initiates action	U8	1	WO
75	60	Math. function Evaluation operand 1 **Note**: At the end, entry must be adopted through index 63.	*Integer value*	See operand table in appendix	U16	2	RW
75	61	Math. function Evaluation operand 1 Min. tolerance limit **Note**: At the end, entry must be adopted through index 63.	*between -9999999.0 and 9999999.0*	Float value Float according to IEEE754	FLT	4	RW
75	62	Math. function Evaluation operand 1 Max. tolerance limit **Note**: At the end, entry must be adopted through index 63.	*between -9999999.0 and 9999999.0*	Float value Float according to IEEE754	FLT	4	RW

Slot	Index	Description	Value	Meaning of value	Type	Len	R/W
75	63	Math. function Copy evaluation1 **Note**: Values entered into indices 60 - 62 are adopted.	*EVENT*	Writing an arbitrary byte initiates action	U8	1	WO
75	64	Math. function Evaluation operand 2 **Note**: At the end, entry must be adopted through index 67.	*Integer value*	See operand table in appendix	U16	2	RW
75	65	Math. function Evaluation operand 2 Min. tolerance limit **Note**: At the end, entry must be adopted through index 67.	*between -9999999.0 and 9999999.0*	Float value Float according to IEEE754	FLT	4	RW
75	66	Math. function Evaluation operand 2 Max. tolerance limit **Note**: At the end, entry must be adopted through index 67.	*between -9999999.0 and 9999999.0*	Float value Float according to IEEE754	FLT	4	RW
75	67	Math. function Copy evaluation 2 **Note**: Values entered into indices 64 - 66 are adopted.	*EVENT*	Writing an arbitrary byte initiates action	U8	1	WO
75	68	Math. function Evaluation operand 3 **Note**: At the end, entry must be adopted through index 71.	*Integer value*	See operand table in appendix	U16	2	RW
75	69	Math. function Evaluation operand 3 Min. tolerance limit **Note**: At the end, entry must be adopted through index 71.	*between -9999999.0 and 9999999.0*	Float value Float according to IEEE754	FLT	4	RW
75	70	Math. function Evaluation operand 3 Max. tolerance limit **Note**: At the end, entry must be adopted through index 71.	*between -9999999.0 and 9999999.0*	Float value Float according to IEEE754	FLT	4	RW

Slot	Index	Description	Value	Meaning of value	Type	Len	R/W
75	71	Math. function Copy evaluation 3 **Note**: Values entered into indices 68 - 70 are adopted.	EVENT	Writing an arbitrary byte initiates action	U8	1	WO
75	72	Math. function Evaluation operand 4 **Note**: At the end, entry must be adopted through index 75.	*Integer value*	See operand table in appendix	U16	2	RW
75	73	Math. function Evaluation operand 4 Min. tolerance limit **Note**: At the end, entry must be adopted through index 75.	*between -9999999.0 and 9999999.0*	Float value Float according to IEEE754	FLT	4	RW
75	74	Math. function Evaluation operand 4 Max-tolerance limit **Note**: At the end, entry must be adopted through index 75.	*between -9999999.0 and 9999999.0*	Float value Float according to IEEE754	FLT	4	RW
75	75	Math. function Copy evaluation 4 **Note**: Values entered into indices 72 - 74 are adopted.	*EVENT*	Writing an arbitrary byte initiates action	U8	1	WO
75	76	Math. function Evaluation operand 5 **Note**: At the end, entry must be adopted through index 79.	*Integer value*	See operand table in appendix	U16	2	RW
75	77	Math. function Evaluation operand 5 Min. tolerance limit **Note**: At the end, entry must be adopted through index 79.	*between -9999999.0 and 9999999.0*	Float value Float according to IEEE754	FLT	4	RW
75	78	Math. function Evaluation operand 5 Max. tolerance limit **Note**: At the end, entry must be adopted through index 79.	*between -9999999.0 and 9999999.0*	Float value Float according to IEEE754	FLT	4	RW

Slot	Index	Description	Value	Meaning of value	Type	Len	R/W
75	79	Math. function Copy evaluation 5 **Note**: Values entered into indices 76 - 78 are adopted.	*EVENT*	Writing an arbitrary byte initiates action	U8	1	WO
75	80	Math. function Evaluation operand 6 **Note**: At the end, entry must be adopted through index 83.	*Integer value*	See operand table in appendix	U16	2	RW
75	81	Math. function Evaluation operand 6 Min. tolerance limit **Note**: At the end, entry must be adopted through index 83.	*between -9999999.0 and 9999999.0*	Float value Float according to IEEE754	FLT	4	RW
75	82	Math. function Evaluation operand 6 Max. tolerance limit **Note**: At the end, entry must be adopted through index 83.	*between -9999999.0 and 9999999.0*	Float value Float according to IEEE754	FLT	4	RW
75	83	Math. function Copy evaluation 6 **Note**: Values entered into indices 80 - 82 are adopted.	*EVENT*	Writing an arbitrary byte initiates action	U8	1	WO

9.1.38 Tolerance band for evaluation elements (Slot 76)

Slot	Index	Description	Value	Meaning of value	Type	Len	R/W
76	0	Not possible	-	-			X
76	1 .. 9	Reserved	-	-			X
76	10	Tolerance band X **Note**: At the end, entry must be adopted through index 13.	*between 0.0 and 9999999.0*	Float value Float according to IEEE754	FLT	4	RW
76	11	Tolerance band Y1 **Note**: At the end, entry must be adopted through index 13.	*between 0.0 and 9999999.0*	Float value Float according to IEEE754	FLT	4	RW
76	12	Tolerance band Y2 **Note**: At the end, entry must be adopted through index 13.	*between 0.0 and 9999999.0*	Float value Float according to IEEE754	FLT	4	RW
76	13	Store tolerance bands **Note**: Values entered into indices 10 - 12 are adopted.	*EVENT*	Writing an arbitrary byte initiates action	U8	1	WO

9.1.39 Realtime switchpoints S1 (Slot 77)

Slot	Index	Description	Value	Meaning of value	Type	Len	R/W
77	0	Not possible	-	-			X
77	1 .. 9	Reserved	-	-			X
77	10	Switchpoint S1 value **Note**: At the end, entry must be adopted through index 14.	*between -9999999.0 and 9999999.0*	Float value Float according to IEEE754	FLT	4	RW
77	11	Switchpoint S1 channel **Note**: At the end, entry must be adopted through index 14.	*0* *1* *2*	Channel X Channel Y1 Channel Y2	U16	2	RW
77	12	Switchpoint S1 level **Note**: At the end, entry must be adopted through index 14.	*0* *1*	Low active High active	U16	2	RW

Slot	Index	Description	Value	Meaning of value	Type	Len	R/W
77	13	Switchpoint 1 reference **Note**: At the end, entry must be adopted through index 14.	*0* *1*	Absolute reference Trigger reference	U16	2	RW
77	14	Switchpoint 1 Copy settings **Note**: Values entered into indices 10 - 13 are adopted.	*EVENT*	Writing an arbitrary byte initiates action	U8	1	WO

9.1.40 Realtime switchpoints S2 (Slot 78)

Slot	Index	Description	Value	Meaning of value	Type	Len	R/W
78	0	Not possible	-	-			X
78	1 .. 9	Reserved	-	-			X
78	10..	See slot 77					

9.1.41 Realtime switchpoints S3 (Slot 79)

Slot	Index	Description	Value	Meaning of value	Type	Len	R/W
79	0	Not possible	-	-			X
79	1 .. 9	Reserved	-	-			X
79	10..	See slot 77					

9.1.42 Realtime switchpoints S4 (Slot 80)

Slot	Index	Description	Value	Meaning of value	Type	Len	R/W
80	0	Not possible	-	-			X
80	1 .. 9	Reserved	-	-			X
80	10..	See slot 77					

9.1.43 Sensortest (Slot 81)

Slot	Index	Description	Value	Meaning of value	Type	Len	R/W
81	0	Not possible	-	-			X
81	1 .. 9	Reserved	-	-			X
81	10	Sensor test Channel X on/off	*0* *1*	off on	U16	2	RW

Slot	Index	Description	Value	Meaning of value	Type	Len	R/W
81	11	Sensor test Channel Y1 on/off	*0* *1*	off on	U16	2	RW
81	12	Sensor test Channel Y2 on/off	*0* *1*	off on	U16	2	RW
81	13	Sensor test Channel X measure reference value	*EVENT*	Writing an arbitrary byte initiates action	U8	1	WO
81	14	Sensor test Channel Y1 measure reference value	*EVENT*	Writing an arbitrary byte initiates action	U8	1	WO
81	15	Sensor test Channel Y2 measure reference value	*EVENT*	Writing an arbitrary byte initiates action	U8	1	WO
81	16	Sensor test Channel X reference value	*between -9999999.0 and 9999999.0*	Float value Float according to IEEE754	FLT	4	RW
81	17	Sensor test Channel Y1 reference value	*between -9999999.0 and 9999999.0*	Float value Float according to IEEE754	FLT	4	RW
81	18	Sensor test Channel Y2 reference value	*between -9999999.0 and 9999999.0*	Float value Float according to IEEE754	FLT	4	RW
81	19	Sensor test Channel X allowed deviation	*between 0.0 and 9999999.0*	Float value Float according to IEEE754	FLT	4	RW
81	20	Sensor test Channel Y1 allowed deviation	*between 0.0 and 9999999.0*	Float value Float according to IEEE754	FLT	4	RW
81	21	Sensor test Channel Y2 allowed deviation	*between 0.0 and 9999999.0*	Float value Float according to IEEE754	FLT	4	RW
81	22	Initiate sensor test **Note**: Read access initiates the sensor test and delivers the result.	*0* *1*	NOK OK	U16	2	RO

9.1.44 Setup user-defined values (Slot 82)

Slot	Index	Description	Value	Meaning of value	Type	Len	R/W
82	0	Not possible	-	-			X
82	1 .. 9	Reserved	-	-			X
82	10	User-defined values value 1	*Integer value*	See operand table in appendix	U16	2	RW
82	11	User-defined values value 2	*Integer value*	See operand table in appendix	U16	2	RW
82	12	User-defined values value 3	*Integer value*	See operand table in appendix	U16	2	RW

Slot	Index	Description	Value	Meaning of value	Type	Len	R/W
82	13	User-defined values value 4	*Integer value*	See operand table in appendix	U16	2	RW
82	14	User-defined values value 5	*Integer value*	See operand table in appendix	U16	2	RW
82	15	User-defined values value 6	*Integer value*	See operand table in appendix	U16	2	RW
82	16	User-defined values value 7	*Integer value*	See operand table in appendix	U16	2	RW
82	17	User-defined values value 8	*Integer value*	See operand table in appendix	U16	2	RW
82	18	User-defined values value 9	*Integer value*	See operand table in appendix	U16	2	RW
82	19	User-defined values value 10	*Integer value*	See operand table in appendix	U16	2	RW
82	20	User-defined values value 11	*Integer value*	See operand table in appendix	U16	2	RW
82	21	User-defined values value 12	*Integer value*	See operand table in appendix	U16	2	RW
82	22	User-defined values value 13	*Integer value*	See operand table in appendix	U16	2	RW
82	23	User-defined values value 14	*Integer value*	See operand table in appendix	U16	2	RW
82	24	User-defined values value 15	*Integer value*	See operand table in appendix	U16	2	RW
82	25	User-defined values value 16	*Integer value*	See operand table in appendix	U16	2	RW
82	26	User-defined values value 17	*Integer value*	See operand table in appendix	U16	2	RW
82	27	User-defined values value 18	*Integer value*	See operand table in appendix	U16	2	RW
82	28	User-defined values value 19	*Integer value*	See operand table in appendix	U16	2	RW
82	29	User-defined values value 20	*Integer value*	See operand table in appendix	U16	2	RW
82	30	User-defined values value 21	*Integer value*	See operand table in appendix	U16	2	RW
82	31	User-defined values value 22	*Integer value*	See operand table in appendix	U16	2	RW
82	32	User-defined values value 23	*Integer value*	See operand table in appendix	U16	2	RW
82	33	User-defined values value 24	*Integer value*	See operand table in appendix	U16	2	RW
82	34	User-defined values value 25 **Note**: Values 25 ... 30 will also be displayed as results in process window M1 (curve)	*Integer value*	See operand table in appendix	U16	2	RW
82	35	User-defined values value 26	*Integer value*	See operand table in appendix	U16	2	RW
82	36	User-defined values value 27	*Integer value*	See operand table in appendix	U16	2	RW

Slot	Index	Description	Value	Meaning of value	Type	Len	R/W
82	37	User-defined values value 28	*Integer value*	See operand table in appendix	U16	2	RW
82	38	User-defined values value 29	*Integer value*	See operand table in appendix	U16	2	RW
82	39	User-defined values value 30	*Integer value*	See operand table in appendix	U16	2	RW

9.1.45 Copy/initialize measurement programs (Slot 83)

Slot	Index	Description	Value	Meaning of value	Type	Len	R/W
83	0	Not possible	-	-		X	X
83	1 .. 9	Reserved	-	-		X	X
83	10	Meas. program number source **Note**: The settings from indices 10 - 12 are being adopted through indices 13, 14 or 15.	*0 ... 31* *0…127*	In the standard device In the corresponding device version	U16	2	WO
83	11	Meas. program number Target start **Note**: The settings from indices 10 - 12 are being adopted through indices 13, 14 or 15.	*0 ... 31* *0…127*	In the standard device In the corresponding device version	U16	2	WO
83	12	Meas. program number Target end **Note**: The settings from indices 10 - 12 are being adopted through indices 13, 14 or 15.	*0 ... 31* *0…127*	In the standard device In the corresponding device version	U16	2	WO
83	13	Copy whole program setup **Note**: Copy according to entries in indices 10 - 12.	*EVENT*	Writing an arbitrary byte initiates action	U8	1	WO
83	14	Copy sensor setup **Note**: Copy according to entries in indices 10 - 12.	*EVENT*	Writing an arbitrary byte initiates action	U8	1	WO

Slot	Index	Description	Value	Meaning of value	Type	Len	R/W
83	15	Initialize selected programs **Note**: Initializing according to indices 11 - 12.	*EVENT*	Writing an arbitrary byte initiates action	U8	1	WO
83	16	Initialize all measurement programs	*EVENT*	Writing an arbitrary byte initiates action	U8	1	WO

9.1.46 Reference curve Y1, Y2 (Slot 84 to 88)

Slot/index data on request

9.1.47 Test operation (Slot 89)

Slot	Index	Description	Value	Meaning of value	Type	Len	R/W
89	0	Not possible					
89	1…9	Reserved					
89	10	Current measurement value channel X	*Float value*	Float according to IEEE754	FLT	4	RO
89	11	Current measurement value channel Y	*Float value*	Float according to IEEE754	FLT	4	RO
89	12	Current measurement value channel Y	*Float value*	Float according to IEEE754	FLT	4	RO

9.1.48 Zoom and autoscale (Slot 90)

Slot	Index	Description	Value	Meaning of value	Type	Len	R/W
90	0	Not possible	-	-		X	X
90	1…9	Reserved	-	-		X	X
90	10	Switching autoscale/fix scale	*0* *1*	Autoscale off Autoscale on	U16	2	RW
90	11	Fix scale Xmin channel Y1 **Note**: At the end, entry must be adopted through index 15.	*Float value*	Float according to IEEE754	FLT	4	RW
90	12	Fix scale Xmax channel Y1 **Note**: At the end, entry must be adopted through index 15.	*Float value*	Float according to IEEE754	FLT	4	RW

Slot	Index	Description	Value	Meaning of value	Type	Len	R/W
90	13	Fix scale Ymin channel Y1 **Note**: At the end, entry must be adopted through index 15.	*Float value*	Float according to IEEE754	FLT	4	RW
90	14	Fix scale Ymax channel Y1 **Note**: At the end, entry must be adopted through index 15.	*Float value*	Float according to IEEE754	FLT	4	RW
90	15	Store y fix scale channel Y1 **Note**: Values entered into indices 11 - 14 are adopted.	*EVENT!*	Writing an arbitrary byte initiates action	U8	1	WO
90	16	Fix scale Xmin channel Y2 **Note**: At the end, entry must be adopted through index 20.	*Float value*	Float according to IEEE754	FLT	4	RW
90	17	Fix scale Xmax channel Y2 **Note**: At the end, entry must be adopted through index 20.	*Float value*	Float according to IEEE754	FLT	4	RW
90	18	Fix scale Ymin channel Y2 **Note**: At the end, entry must be adopted through index 20.	*Float value*	Float according to IEEE754	FLT	4	RW
90	19	Fix scale Ymax channel Y2 **Note**: At the end, entry must be adopted through index 20.	*Float value*	Float according to IEEE754	FLT	4	RW
90	20	Store fix scale channel Y2 **Note**: Values entered into indices 16 - 19 are adopted.	*EVENT!*	Writing an arbitrary byte initiates action	U8	1	WO

9.2 Measurement results

9.2.1 Status of measurement

Slot	Index	Description	Value	Meaning of value	Type	Len	R/W
100	0	Not possible	-	-		X	X
100	1…9	Reserved				X	X
100	10	Index of the last measured value of the current curve **Caution**: The number of the pair of values is shown on the display. The index begins at 0, the number at 1!	*16 Bit Integer value*	0 means that there is no measurement curve	U16	2	RO
100	11	Running measurement curve counter [only relevant for Digicontrol usage]	*32 Bit Integer value*	This counter is incremented by 1 when a measurement curve is newly acquired in any menue	U32	4	RO
100	12	Amount of curves in current array of curves	*0…10*	Integer value between 0 and 10	U16	2	RO

9.2.2 Further information for current measurement curve

Slot	Index	Description	Value	Meaning of value	Type	Len	R/W
101	0	Not possible	-	-		X	X
101	1…9	Reserved	-	-		X	X
101	10	Counter	*32 Bit Integer value*		U32	4	RO
101	11	NOK counter (sum)	*32 Bit Integer value*		U32	4	RO
101	12	Total evaluation	*0* *1*	NOK OK	U16	2	RO
101	13	Evaluation channel Y1	*0* *1*	NOK OK	U16	2	RO
101	14	Evaluation channel Y2	*0* *1*	NOK OK	U16	2	RO
101	15	Index of the curve´s return point **Caution**: The number of the pair of values is shown on the display. The index begins at 0, the number at 1!	*16 Bit Integer value*		U16	2	RO

Slot	Index	Description	Value	Meaning of value	Type	Len	R/W
101	16	Index of the last measured value of the curve **Caution**: The number of the pair of values is shown on the display. The index begins at 0, the number at 1!	*16 Bit Integer value*		U16	2	RO
101	17	Status overdrive of the A/D converter	*0* *1*	No overdrive Overdrive	U16	2	RO
101	18	Date of recording	*String in format dd.mm.yyyy*		STR 10	10	RO
101	19	Time of recording hh:mm:ss	*String in format hh:mm:ss*		STR 8	8	RO
101	20	Unit channel X	*String with max. 4 characters, e.g. "N" or "inch"*		STR 4	4	RO
101	21	Unit channel Y1	*String with max. 4 characters, e.g. "N" or "inch"*		STR 4	4	RO
101	22	Unit channel Y2	*String with max. 4 characters, e.g. "N" or "inch"*		STR 4	4	RO

9.2.3 Further information for current pretrigger curve

Slot	Index	Description	Value	Meaning of value	Type	Len	R/W
102	0	Not possible	-	-		X	X
102	1…9	Reserved	-	-		X	X
102	10	Pretrigger recording on/off	*0* *1*	off on	U16	2	RO
102	11	Whole amount of pretrigger values	*32 Bit Integer value*		U32	4	RO
102	12	Index of first pretrigger value (0…255)	*0…255*	Integer value between 0…255	U16	2	RO
102	13	Index of last pretrigger value (0…255)	*0…255*	Integer value between 0…255	U16	2	RO

9.2.4 General curve data channel Y1

Slot	Index	Description	Value	Meaning of value	Type	Len	R/W
103	0	Not possible	-	-		X	X
103	1…9	Reserved	-	-		X	X
103	10	X-minimum, X-coordinate	*Float value*	Float according to IEEE754	FLT	4	RO
103	11	X-minimum, Y1-coordinate	*Float value*	Float according to IEEE754	FLT	4	RO
103	12	X-maximum, X-coordinate	*Float value*	Float according to IEEE754	FLT	4	RO
103	13	X-maximum, Y1-coordinate	*Float value*	Float according to IEEE754	FLT	4	RO
103	14	Y1-minimum, X-coordinate	*Float value*	Float according to IEEE754	FLT	4	RO
103	15	Y1-minimum, Y1-coordinate	*Float value*	Float according to IEEE754	FLT	4	RO
103	16	Y1-maximum, X-coordinate	*Float value*	Float according to IEEE754	FLT	4	RO
103	17	Y1-maximum, Y1-coordinate	*Float value*	Float according to IEEE754	FLT	4	RO
103	18	First value X-coordinate	*Float value*	Float according to IEEE754	FLT	4	RO
103	19	First value Y1-coordinate	*Float value*	Float according to IEEE754	FLT	4	RO
103	20	Last value X-coordinate	*Float value*	Float according to IEEE754	FLT	4	RO
103	21	Last value Y1-coordinate	*Float value*	Float according to IEEE754	FLT	4	RO
103	22	Return point X-coordinate	*Float value*	Float according to IEEE754	FLT	4	RO
103	23	Return point Y1-coordinate	*Float value*	Float according to IEEE754	FLT	4	RO

9.2.5 General curve data channel Y2

Slot	Index	Description	Value	Meaning of value	Type	Len	R/W
104	0	Not possible	-	-		X	X
104	1…9	Reserved	-	-		X	X
104	10	See slot 103					

9.2.6 Request measurement results of user-defined values

Slot	Index	Description	Value	Meaning of value	Type	Len	R/W
105	0	Not possible	-	-		X	X
105	1…9	Reserved	-	-		X	X

Slot	Index	Description	Value	Meaning of value	Type	Len	R/W
105	10	User-defined value 1 name	*String with the designator of the value*	Designator = "0" means that no value is defined for this value number	STR 16	16	RO
105	11	User-defined value 1 measurement value	*Float value*	Float according to IEEE754	FLT	4	RO
105	12	User-defined value 1 unit	*String with max. 4 characters, e.g. "N" or "inch"*	See operand table in appendix.	STR 4	4	RO
105	13	User-defined value 2 name	*String with the designator of the value*	Designator = "0" means that no value is defined for this value number	STR 16	16	RO
105	14	User-defined value 2 measurement value	*Float value*	Float according to IEEE754	FLT	4	RO
105	15	User-defined value 2 unit	*String with max. 4 characters, e.g. "N" or "inch"*	See operand table in appendix.	STR 4	4	RO
105	16	User-defined value 3 name	*String with the designator of the value*	Designator = "0" means that no value is defined for this value number	STR 16	16	RO
105	17	User-defined value 3 measurement value	*Float value*	Float according to IEEE754	FLT	4	RO
105	18	User-defined value 3 unit	*String with max. 4 characters, e.g. "N" or "inch"*	See operand table in appendix.	STR 4	4	RO
105	19	User-defined value 4 name	*String with the designator of the value*	Designator = "0" means that no value is defined for this value number	STR 16	16	RO
105	20	User-defined value 4 measurement value	*Float value*	Float according to IEEE754	FLT	4	RO
105	21	User-defined value 4 unit	*String with max. 4 characters, e.g. "N" or "inch"*	See operand table in appendix.	STR 4	4	RO
105	22	User-defined value 5 name	*String with the designator of the value*	Designator = "0" means that no value is defined for this value number	STR 16	16	RO
105	23	User-defined value 5 measurement value	*Float value*	Float according to IEEE754	FLT	4	RO

Slot	Index	Description	Value	Meaning of value	Type	Len	R/W
105	24	User-defined value 5 unit	*String with max. 4 characters, e.g. "N" or "inch"*	See operand table in appendix.	STR 4	4	RO
105	25	User-defined value 6 name	*String with the designator of the value*	Designator = "0" means that no value is defined for this value number	STR 16	16	RO
105	26	User-defined value 6 measurement value	*Float value*	Float according to IEEE754	FLT	4	RO
105	27	User-defined value 6 unit	*String with max. 4 characters, e.g. "N" or "inch"*	See operand table in appendix.	STR 4	4	RO
105	28	User-defined value 7 name	*String with the designator of the value*	Designator = "0" means that no value is defined for this value number	STR 16	16	RO
105	29	User-defined value 7 measurement value	*Float value*	Float according to IEEE754	FLT	4	RO
105	30	User-defined value 7 unit	*String with max. 4 characters, e.g. "N" or "inch"*	See operand table in appendix.	STR 4	4	RO
105	31	User-defined value 8 name	*String with the designator of the value*	Designator = "0" means that no value is defined for this value number	STR 16	16	RO
105	32	User-defined value 8 measurement value	*Float value*	Float according to IEEE754	FLT	4	RO
105	33	User-defined value 8 unit	*String with max. 4 characters, e.g. "N" or "inch"*	See operand table in appendix.	STR 4	4	RO
105	34	User-defined value 9 name	*String with the designator of the value*	Designator = "0" means that no value is defined for this value number	STR 16	16	RO
105	35	User-defined value 9 measurement value	*Float value*	Float according to IEEE754	FLT	4	RO
105	36	User-defined value 9 unit	*String with max. 4 characters, e.g. "N" or "inch"*	See operand table in appendix.	STR 4	4	RO
105	37	User-defined value 10 name	*String with the designator of the value*	Designator = "0" means that no value is defined for this value number	STR 16	16	RO

Slot	Index	Description	Value	Meaning of value	Type	Len	R/W
105	38	User-defined value 10 measurement value	*Float value*	Float according to IEEE754	FLT	4	RO
105	39	User-defined value 10 unit	*String with max. 4 characters, e.g. "N" or "inch"*	See operand table in appendix.	STR 4	4	RO
105	40	User-defined value 11 name	*String with the designator of the value*	Designator = "0" means that no value is defined for this value number	STR 16	16	RO
105	41	User-defined value 11 measurement value	*Float value*	Float according to IEEE754	FLT	4	RO
105	42	User-defined value 11 unit	*String with max. 4 characters, e.g. "N" or "inch"*	See operand table in appendix.	STR 4	4	RO
105	43	User-defined value 12 name	*String with the designator of the value*	Designator = "0" means that no value is defined for this value number	STR 16	16	RO
105	44	User-defined value 12 measurement value	*Float value*	Float according to IEEE754	FLT	4	RO
105	45	User-defined value 12 unit	*String with max. 4 characters, e.g. "N" or "inch"*	See operand table in appendix.	STR 4	4	RO
105	46	User-defined value 13 name	*String with the designator of the value*	Designator = "0" means that no value is defined for this value number	STR 16	16	RO
105	47	User-defined value 13 measurement value	*Float value*	Float according to IEEE754	FLT	4	RO
105	48	User-defined value 13 unit	*String with max. 4 characters, e.g. "N" or "inch"*	See operand table in appendix.	STR 4	4	RO
105	49	User-defined value 14 name	*String with the designator of the value*	Designator = "0" means that no value is defined for this value number	STR 16	16	RO
105	50	User-defined value 14 measurement value	*Float value*	Float according to IEEE754	FLT	4	RO
105	51	User-defined value 14 unit	*String with max. 4 characters, e.g. "N" or "inch"*	See operand table in appendix.	STR 4	4	RO

Slot	Index	Description	Value	Meaning of value	Type	Len	R/W
105	52	User-defined value 15 name	*String with the designator of the value*	Designator = "0" means that no value is defined for this value number	STR 16	16	RO
105	53	User-defined value 15 measurement value	*Float value*	Float according to IEEE754	FLT	4	RO
105	54	User-defined value 15 unit	*String with max. 4 characters, e.g. "N" or "inch"*	See operand table in appendix.	STR 4	4	RO
105	55	User-defined value 16 name	*String with the designator of the value*	Designator = "0" means that no value is defined for this value number	STR 16	16	RO
105	56	User-defined value 16 measurement value	*Float value*	Float according to IEEE754	FLT	4	RO
105	57	User-defined value 16 unit	*String with max. 4 characters, e.g. "N" or "inch"*	See operand table in appendix.	STR 4	4	RO
105	58	User-defined value 17 name	*String with the designator of the value*	Designator = "0" means that no value is defined for this value number	STR 16	16	RO
105	59	User-defined value 17 measurement value	*Float value*	Float according to IEEE754	FLT	4	RO
105	60	User-defined value 17 unit	*String with max. 4 characters, e.g. "N" or "inch"*	See operand table in appendix.	STR 4	4	RO
105	61	User-defined value 18 name	*String with the designator of the value*	Designator = "0" means that no value is defined for this value number	STR 16	16	RO
105	62	User-defined value 18 measurement value	*Float value*	Float according to IEEE754	FLT	4	RO
105	63	User-defined value 18 unit	*String with max. 4 characters, e.g. "N" or "inch"*	See operand table in appendix.	STR 4	4	RO
105	64	User-defined value 19 name	*String with the designator of the value*	Designator = "0" means that no value is defined for this value number	STR 16	16	RO
105	65	User-defined value 19 measurement value	*Float value*	Float according to IEEE754	FLT	4	RO

Slot	Index	Description	Value	Meaning of value	Type	Len	R/W
105	66	User-defined value 19 unit	*String with max. 4 characters, e.g. "N" or "inch"*	See operand table in appendix.	STR 4	4	RO
105	67	User-defined value 20 name	*String with the designator of the value*	Designator = "0" means that no value is defined for this value number	STR 16	16	RO
105	68	User-defined value 20 measurement value	*Float value*	Float according to IEEE754	FLT	4	RO
105	69	User-defined value 20 unit	*String with max. 4 characters, e.g. "N" or "inch"*	See operand table in appendix.	STR 4	4	RO
105	70	User-defined value 21 name	*String with the designator of the value*	Designator = "0" means that no value is defined for this value number	STR 16	16	RO
105	71	User-defined value 21 measurement value	*Float value*	Float according to IEEE754	FLT	4	RO
105	72	User-defined value 21 unit	*String with max. 4 characters, e.g. "N" or "inch"*	See operand table in appendix.	STR 4	4	RO
105	73	User-defined value 22 name	*String with the designator of the value*	Designator = "0" means that no value is defined for this value number	STR 16	16	RO
105	74	User-defined value 22 measurement value	*Float value*	Float according to IEEE754	FLT	4	RO
105	75	User-defined value 22 unit	*String with max. 4 characters, e.g. "N" or "inch"*	See operand table in appendix.	STR 4	4	RO
105	76	User-defined value 23 name	*String with the designator of the value*	Designator = "0" means that no value is defined for this value number	STR 16	16	RO
105	77	User-defined value 23 measurement value	*Float value*	Float according to IEEE754	FLT	4	RO
105	78	User-defined value 23 unit	*String with max. 4 characters, e.g. "N" or "inch"*	See operand table in appendix.	STR 4	4	RO
105	79	User-defined value 24 name	*String with the designator of the value*	Designator = "0" means that no value is defined for this value number	STR 16	16	RO

Slot	Index	Description	Value	Meaning of value	Type	Len	R/W
105	80	User-defined value 24 measurement value	*Float value*	Float according to IEEE754	FLT	4	RO
105	81	User-defined value 24 unit	*String with max. 4 characters, e.g. "N" or "inch"*	See operand table in appendix.	STR 4	4	RO
105	82	User-defined value 25 name	*String with the designator of the value*	Designator = "0" means that no value is defined for this value number	STR 16	16	RO
105	83	User-defined value 25 measurement value	*Float value*	Float according to IEEE754	FLT	4	RO
105	84	User-defined value 25 unit	*String with max. 4 characters, e.g. "N" or "inch"*	See operand table in appendix.	STR 4	4	RO
105	85	User-defined value 26 name	*String with the designator of the value*	Designator = "0" means that no value is defined for this value number	STR 16	16	RO
105	86	User-defined value 26 measurement value	*Float value*	Float according to IEEE754	FLT	4	RO
105	87	User-defined value 26 unit	*String with max. 4 characters, e.g. "N" or "inch"*	See operand table in appendix.	STR 4	4	RO
105	88	User-defined value 27 name	*String with the designator of the value*	Designator = "0" means that no value is defined for this value number	STR 16	16	RO
105	89	User-defined value 27 measurement value	*Float value*	Float according to IEEE754	FLT	4	RO
105	90	User-defined value 27 unit	*String with max. 4 characters, e.g. "N" or "inch"*	See operand table in appendix.	STR 4	4	RO
105	91	User-defined value 28 name	*String with the designator of the value*	Designator = "0" means that no value is defined for this value number	STR 16	16	RO
105	92	User-defined value 28 measurement value	*Float value*	Float according to IEEE754	FLT	4	RO
105	93	User-defined value 28 unit	*String with max. 4 characters, e.g. "N" or "inch"*	See operand table in appendix.	STR 4	4	RO

Slot	Index	Description	Value	Meaning of value	Type	Len	R/W
105	94	User-defined value 29 name	*String with the designator of the value*	Designator = "0" means that no value is defined for this value number	STR 16	16	RO
105	95	User-defined value 29 measurement value	*Float value*	Float according to IEEE754	FLT	4	RO
105	96	User-defined value 29 unit	*String with max. 4 characters, e.g. "N" or "inch"*	See operand table in appendix.	STR 4	4	RO
105	97	User-defined value 30 name	*String with the designator of the value*	Designator = "0" means that no value is defined for this value number	STR 16	16	RO
105	98	User-defined value 30 measurement value	*Float value*	Float according to IEEE754	FLT	4	RO
105	99	User-defined value 30 unit	*String with max. 4 characters, e.g. "N" or "inch"*	See operand table in appendix.	STR 4	4	RO

9.2.7 Statistic measurement result evaluation element window 1 (EvElem 1)

Slot/index data on request

9.2.8 Statistic measurement result evaluation element window 2 (EvElem 2)

Slot/index data on request

9.2.9 Statistic measurement result evaluation element window 3 (EvElem 3)

Slot/index data on request

9.2.10 Statistic measurement result evaluation element window 4 (EvElem 4)

Slot/index data on request

9.2.11 Statistic measurement result evaluation element window 5 (EvElem 5)

Slot/index data on request

9.2.12 Statistic measurement result evaluation element window 6 (EvElem 6)

Slot/index data on request

9.2.13 Statistic measurement result evaluation element window 7 (EvElem 7)

Slot/index data on request

9.2.14 Statistic measurement result evaluation element window 8 (EvElem 8)

Slot/index data on request

9.2.15 Statistic measurement result evaluation element window 9 (EvElem 9)

Slot/index data on request

9.2.16 Statistic measurement result evaluation element window 10 (EvElem 10)

Slot/index data on request

9.2.17 Statistic measurement result evaluation element threshold 1 (EvElem 11)

Slot/index data on request

9.2.18 Statistic measurement result evaluation element threshold 2 (EvElem 12)

Slot/index data on request

9.2.19 Statistic measurement result evaluation element threshold 3 (EvElem 13)

Slot/index data on request

9.2.20 Statistic measurement result evaluation element threshold 4 (EvElem 14)

Slot/index data on request

9.2.21 Statistic measurement result evaluation element trapezoid window X1 (EvElem 15)

Slot/index data on request

9.2.22 Statistic measurement result evaluation element trapezoid window X2 (EvElem 16)

Slot/index data on request

9.2.23 Statistic measurement result evaluation element trapezoid window Y1 (EvElem 17)

Slot/index data on request

9.2.24 Statistic measurement result evaluation element trapezoid window Y2 (EvElem 18)

Slot/index data on request

9.2.25 Statistic measurement result evaluation element envelope 1 (EvElem 19)

Slot/index data on request

9.2.26 Statistic measurement result evaluation element envelope 2 (EvElem 20)

Slot/index data on request

9.2.27 Statistic measurement result evaluation element mathematical calculation 1 (EvElem 21)

Slot/index data on request

9.2.28 Statistic measurement result evaluation element mathematical calculation 2 (EvElem 22)

Slot/index data on request

9.2.29 Statistic measurement result evaluation element mathematical calculation 3 (EvElem 23)

Slot/index data on request

9.2.30 Statistic measurement result evaluation element mathematical calculation 4 (EvElem 24)

Slot/index data on request

9.2.31 Statistic measurement result evaluation element mathematical calculation 5 (EvElem 25)

Slot/index data on request

9.2.32 Statistic measurement result evaluation element mathematical calculation 6 (EvElem 26)

Slot/index data on request

9.2.33 Read-out curve coordinates of current measurement curve with single array access

Note that there are two different ways to read the coordinates of the measurement curve:

- Read complete coordinates with a single array access (Array size up to 20 KB)
- Read unique coordinates in several coordinate groups of up to 200 coordinates each

Sequence to read the complete curve coordinates

1. Load the curve into the field bus controller through a write access to index 10.
2. Query the index of the last measured value of the curve (→ end of the curve) through a read access to index 10 to know the size of the complete curve array (size = index +1).
3. Read the complete coordinate-array with access to index 11 (Array size up to 5000 float values = 20 KB).

Note: Please note that you have to announce the length of the buffer to write the curve coordinates to PLC side buffer. Maximum buffer size required to store 5.000 float coordinates is 20.000 bytes. The device will not send more bytes than you have announced.

Sequence to read the unique curve coordinates

1. Load the curve into the field bus controller through a write access to index 10.
2. Query the index of the last measured value of the curve (→ end of the curve) through a read access to index 10 to know the size of the complete curve array.
3. The curve can now be read out in coordinate groups of up to 200 coordinates each:
   Coordinate group 0: Measured value 0 … 199
   Coordinate group 1: Measured value 200 … 399
   Coordinate group 2: Measured value 400 … 599 … etc.
4. The number of the desired coordinate group is entered through a write access to index 19. Since you want to read the beginning of the curve, enter a 0.

   It is now possible to read the coordinate values no. 0 … 199 (at present you have selected coordinate group 0) at the indices 20 … 219.
5. To access the coordinate group 1 (values 200 … 399) write 1 to index 19.
   It is now possible to read curve values no. 200 … 399 at indices 20 … 219.
6. Follow the same way to read the further coordinate groups.
7. Only coordinate values that are smaller than or equal to the number of the last measured value (which was read at index 10) may be read out.

Slot	Index	Description	Value	Meaning of value	Type	Len	R/W
132	0	Not possible	-	-		X	X
132	1…9	Reserved	-	-		X	X
132	10	**Write access:** If a curve is to be read, it must be prepared through a write access before the curve is first read. **Read access:** Index of the last coordinate; if 0, there is no curve	*EVENT! Writing any two arbitrary bytes initiates action* *Integer value 0…4999*		U16 U16	2 2	W_ R_
132	11	Complete coordinates as float array. **Note:** Only filed bus software V201601 and upper Before reading the coordinates perform a write access on index 10 to prepare the curve and a read access on the same index 10 to determine the number of coordinates	*Float array of 0…5000 values*	Float array according to IEEE754	FLT	0-20.000	RO
132	12…18	Reserved	-	-		X	X

Slot	Index	Description	Value	Meaning of value	Type	Len	R/W
132	19	**Write access:** Desired group of 200 coordinates. For example, if coordinates 600 … 799 are to be displayed, there must be a 3 here. Query the maximum number of value pairs under slot 132/10. **Read access:** Group of 200 coordinates currently displayed.	*Integer value 0 … 24* *Integer value 0 … 24*		U16 U16	2 2	W_ R_
132	20	0. coordinate of group of coordinates	*Float value*	Float according to IEEE754	FLT	4	RO
132	21	1. coordinate of group of coordinates	*Float value*	Float according to IEEE754	FLT	4	RO
132	22	2. coordinate of group of coordinates	*Float value*	Float according to IEEE754	FLT	4	RO
132	23	3. coordinate of group of coordinates	*Float value*	Float according to IEEE754	FLT	4	RO
132	…	…	…	…	…	…	…
132	217	197. coordinate of group of coordinates	*Float value*	Float according to IEEE754	FLT	4	RO
132	218	198. coordinate of group of coordinates	*Float value*	Float according to IEEE754	FLT	4	RO
132	219	199. coordinate of group of coordinates	*Float value*	Float according to IEEE754	FLT	4	RO

9.2.34 Read-out Y1-coordinates of current measurement curve

Slot	Index	Description	Value	Meaning of value	Type	Len	R/W
133	0	Not possible	-	-		X	X
133	1…9	Reserved	-	-		X	X
133	10…	See slot 132				X	X

9.2.35 Read-out Y2-coordinates of current measurement curve

Slot	Index	Description	Value	Meaning of value	Type	Len	R/W
134	0	Not possible	-	-		X	X
134	1…9	Reserved	-	-		X	X
134	10…	See slot 132				X	X

9.2.36 Read-out X-coordinates of current pretrigger curve

Slot	Index	Description	Value	Meaning of value	Type	Len	R/W
135	0	Not possible	-	-		X	X
135	1…9	Reserved	-	-		X	X
135	10	**Write access:** If a curve is to be read, it must be prepared through a write access before the curve is first read. **Read access:** Index of the last coordinate; if 0, there is no curve	*EVENT! Writing any two arbitrary bytes initiates action* *Integer value 0…255*		U16 U16	2 2	W_ R_
135	11	Complete coordinates as float array. **Note:** Only filed bus software V201601 and upper Before reading the coordinates perform a write access on index 10 to prepare the curve and a read access on the same index 10 to determine the number of coordinates	*Float array of 0…5000 values*	Float array according to IEEE754	FLT	0-20.000	RO
135	12…18	Reserved	-	-		X	X
135	19	**Write access:** Desired group of 200 coordinates. For example, if coordinates 600 … 799 are to be displayed, there must be a 3 here. **Read access:** Group of 200 coordinates currently displayed.	*Integer value 0…1* *Integer value 0…1*		U16 U16	2 2	W_ R_

Slot	Index	Description	Value	Meaning of value	Type	Len	R/W
135	20	0. coordinate of group of coordinates	*Float value*	Float according to IEEE754	FLT	4	RO
135	21	1. coordinate of group of coordinates	*Float value*	Float according to IEEE754	FLT	4	RO
135	22	2. coordinate of group of coordinates	*Float value*	Float according to IEEE754	FLT	4	RO
135	23	3. coordinate of group of coordinates	*Float value*	Float according to IEEE754	FLT	4	RO
135	…	…	…	…	…	…	…
135	217	197. coordinate of group of coordinates	*Float value*	Float according to IEEE754	FLT	4	RO
135	218	198. coordinate of group of coordinates	*Float value*	Float according to IEEE754	FLT	4	RO
135	219	199. coordinate of group of coordinates	*Float value*	Float according to IEEE754	FLT	4	RO

9.2.37 Read-out Y1-coordinates of current pretrigger curve

Slot	Index	Description	Value	Meaning of value	Type	Len	R/W
136	0	Not possible	-	-		X	X
136	1…9	Reserved	-	-		X	X
136	10…	See slot 135				X	X

9.2.38 Read-out Y2-coordinates of current pretrigger curve

Slot	Index	Description	Value	Meaning of value	Type	Len	R/W
137	0	Not possible	-	-		X	X
137	1…9	Reserved	-	-		X	X
137	10…	See slot 135				X	X

9.2.39 Evaluation results window 1

Slot	Index	Description	Value	Meaning of value	Type	Len	R/W
138	0	Not possible	-	-		X	X
138	1…9	Reserved	-	-		X	X
138	10	Window 1 evaluation results OK/NOK	*0* *1*	NOK OK	U16	2	RO
138	11	Window 1 NOK counter	*32bit-Integer value >= 0*		U32	4	RO
138	12	Window 1 entry of curve X-coordinate	*Float value*	Float according to IEEE754	FLT	4	RO
138	13	Window 1 entry of curve Y-coordinate	*Float value*	Float according to IEEE754	FLT	4	RO

Slot	Index	Description	Value	Meaning of value	Type	Len	R/W
138	14	Window 1 exit of curve X-coordinate	*Float value*	Float according to IEEE754	FLT	4	RO
138	15	Window 1 exit of curve Y-coordinate	*Float value*	Float according to IEEE754	FLT	4	RO
138	16	Window 1 absolute Y- maximum in window X-coordinate	*Float value*	Float according to IEEE754	FLT	4	RO
138	17	Window 1 absolute Y-maximum in window Y-coordinate	*Float value*	Float according to IEEE754	FLT	4	RO
138	18	Window 1 absolute Y-minimum in window X-coordinate	*Float value*	Float according to IEEE754	FLT	4	RO
138	19	Window 1 absolute Y-minimum in window Y-coordinate	*Float value*	Float according to IEEE754	FLT	4	RO
138	20	Window 1 local Y-maximum in window X-coordinate	*Float value*	Float according to IEEE754	FLT	4	RO
138	21	Window 1 local Y-maximum in window Y-coordinate	*Float value*	Float according to IEEE754	FLT	4	RO
138	22	Window 1 local Y-minimum in window X-coordinate	*Float value*	Float according to IEEE754	FLT	4	RO
138	23	Window 1 local Y-minimum in window Y-coordinate	*Float value*	Float according to IEEE754	FLT	4	RO
138	24	Window 1 bend X-coordinate	*Float value*	Float according to IEEE754	FLT	4	RO
138	25	Window 1 bend Y-coordinate	*Float value*	Float according to IEEE754	FLT	4	RO
138	26	Window 1 gradient value	*Float value*	Float according to IEEE754	FLT	4	RO
138	27	Window 1 Y-mean value	*Float value*	Float according to IEEE754	FLT	4	RO
138	28	Window 1 area below curve	*Float value*	Float according to IEEE754	FLT	4	RO

9.2.40 Evaluation results window 2

Slot	Index	Description	Value	Meaning of value	Type	Len	R/W
139	0	Not possible	-	-		X	X
139	1…9	Reserved	-	-		X	X
139	10…	See slot 138				X	X

9.2.41 Evaluation results window 3

Slot	Index	Description	Value	Meaning of value	Type	Len	R/W
140	0	Not possible	-	-		X	X
140	1…9	Reserved	-	-		X	X
140	10…	See slot 138				X	X

9.2.42 Evaluation results window 4

Slot	Index	Description	Value	Meaning of value	Type	Len	R/W
141	0	Not possible	-	-		X	X
141	1…9	Reserved	-	-		X	X
141	10…	See slot 138				X	X

9.2.43 Evaluation results window 5

Slot	Index	Description	Value	Meaning of value	Type	Len	R/W
142	0	Not possible	-	-		X	X
142	1…9	Reserved	-	-		X	X
142	10…	See slot 138				X	X

9.2.44 Evaluation results window 6

Slot	Index	Description	Value	Meaning of value	Type	Len	R/W
143	0	Not possible	-	-		X	X
143	1…9	Reserved	-	-		X	X
143	10…	See slot 138				X	X

9.2.45 Evaluation results window 7

Slot	Index	Description	Value	Meaning of value	Type	Len	R/W
144	0	Not possible	-	-		X	X
144	1…9	Reserved	-	-		X	X
144	10…	See slot 138				X	X

9.2.46 Evaluation results window 8

Slot	Index	Description	Value	Meaning of value	Type	Len	R/W
145	0	Not possible	-	-		X	X
145	1…9	Reserved	-	-		X	X
145	10…	See slot 138				X	X

9.2.47 Evaluation results window 9

Slot	Index	Description	Value	Meaning of value	Type	Len	R/W
146	0	Not possible	-	-		X	X
146	1…9	Reserved	-	-		X	X
146	10…	See slot 138				X	X

9.2.48 Evaluation results window 10

Slot	Index	Description	Value	Meaning of value	Type	Len	R/W
147	0	Not possible	-	-		X	X
147	1…9	Reserved	-	-		X	X
147	10…	See slot 138				X	X

9.2.49 Evaluation results threshold 1

Slot	Index	Description	Value	Meaning of value	Type	Len	R/W
148	0	Not possible	-	-		X	X
148	1…9	Reserved	-	-		X	X
148	10	Threshold 1 evaluation result OK/NOK	*0* *1*	NOK OK	U16	2	RO
148	11	Threshold 1 NOK counter	*32bit-Integer value >= 0*		U32	4	RO
148	12	Threshold intersection point 1 X-coordinate	*Float value*	Float according to IEEE754	FLT	4	RO
148	13	Threshold intersection point 1 Y-coordinate	*Float value*	Float according to IEEE754	FLT	4	RO
148	14	Threshold 1 absolute Y-maximum in threshold X-coordinate	*Float value*	Float according to IEEE754	FLT	4	RO
148	15	Threshold 1 absolute Y-maximum in	*Float value*	Float according to IEEE754	FLT	4	RO

Slot	Index	Description	Value	Meaning of value	Type	Len	R/W
		threshold Y-coordinate					
148	16	Threshold 1 absolute Y-minimum in threshold X-coordinate	*Float value*	Float according to IEEE754	FLT	4	RO
148	17	Threshold 1 absolute Y-minimum in threshold Y-coordinate	*Float value*	Float according to IEEE754	FLT	4	RO
148	18	Threshold 1 local Y-maximum in threshold X-coordinate	*Float value*	Float according to IEEE754	FLT	4	RO
148	19	Threshold 1 local Y-maximum in threshold Y-coordinate	*Float value*	Float according to IEEE754	FLT	4	RO
148	20	Threshold 1 local Y-minimum in threshold X-coordinate	*Float value*	Float according to IEEE754	FLT	4	RO
148	21	Threshold 1 local Y-minimum in threshold Y-coordinate	*Float value*	Float according to IEEE754	FLT	4	RO
148	22	Threshold 1 bend X-coordinate	*Float value*	Float according to IEEE754	FLT	4	RO
148	23	Threshold 1 bend Y-coordinate	*Float value*	Float according to IEEE754	FLT	4	RO
148	24	Threshold 1 gradient value	*Float value*	Float according to IEEE754	FLT	4	RO
148	25	Threshold 1 Y-mean value	*Float value*	Float according to IEEE754	FLT	4	RO
148	26	Threshold 1 area below curve	*Float value*	Float according to IEEE754	FLT	4	RO

9.2.50 Evaluation results threshold 2

Slot	Index	Description	Value	Meaning of value	Type	Len	R/W
149	0	Not possible	-	-		X	X
149	1…9	Reserved	-	-		X	X
149	10…	See slot 148				X	X

9.2.51 Evaluation results threshold 3

Slot	Index	Description	Value	Meaning of value	Type	Len	R/W
150	0	Not possible	-	-		X	X
150	1…9	Reserved	-	-		X	X
150	10…	See slot 148				X	X

9.2.52 Evaluation results threshold 4

Slot	Index	Description	Value	Meaning of value	Type	Len	R/W
151	0	Not possible	-	-		X	X
151	1…9	Reserved	-	-		X	X
151	10…	See slot 148				X	X

9.2.53 Evaluation results trapezoid window X1

Slot	Index	Description	Value	Meaning of value	Type	Len	R/W
152	0	Not possible	-	-		X	X
152	1…9	Reserved	-	-		X	X
152	10	Trapezoid X 1 evaluation result OK/NOK	*0* *1*	NOK OK	U16	2	RO
152	11	Trapezoid X 1 NOK counter	*32bit-Integer value >= 0*		U32	4	RO
152	12	Trapezoid X 1 entry coordinate X-coordinate	*Float value*	Float according to IEEE754	FLT	4	RO
152	13	Trapezoid X 1 entry coordinate Y-coordinate	*Float value*	Float according to IEEE754	FLT	4	RO
152	14	Trapezoid X 1 exit coordinate X-coordinate	*Float value*	Float according to IEEE754	FLT	4	RO
152	15	Trapezoid X 1 exit coordinate Y-coordinate	*Float value*	Float according to IEEE754	FLT	4	RO

9.2.54 Evaluation results trapezoid window X2

Slot	Index	Description	Value	Meaning of value	Type	Len	R/W
153	0	Not possible	-	-		X	X
153	1…9	Reserved	-	-		X	X
153	10…	See slot 152				X	X

9.2.55 Evaluation results trapezoid window Y1

Slot	Index	Description	Value	Meaning of value	Type	Len	R/W
154	0	Not possible	-	-		X	154
154	1…9	Reserved	-	-		X	154
154	10	Trapezoid Y1 evaluation results OK/NOK	*0* *1*	NOK OK	U16	2	154
154	11	Trapezoid Y1 NOK counter	*32bit-Integer value >= 0*		U32	4	154
154	12	Trapezoid Y1 entry coordinate X-coordinate	*Float value*	Float according to IEEE754	FLT	4	RO
154	13	Trapezoid Y1 entry coordinate Y-coordinate	*Float value*	Float according to IEEE754	FLT	4	RO
154	14	Trapezoid Y1 exit coordinate X-coordinate	*Float value*	Float according to IEEE754	FLT	4	RO
154	15	Trapezoid Y1 exit coordinate Y-coordinate	*Float value*	Float according to IEEE754	FLT	4	RO

9.2.56 Evaluation results trapezoid window Y2

Slot	Index	Description	Value	Meaning of value	Type	Len	R/W
155	0	Not possible	-	-		X	X
155	1…9	Reserved	-	-		X	X
155	10…	See slot 154				X	X

9.2.57 Evaluation results envelope 1

Slot	Index	Description	Value	Meaning of value	Type	Len	R/W
156	0	Not possible	-	-		X	X
156	1…9	Reserved	-	-		X	X
156	10	Envelope 1 evaluation result OK/NOK	*0* *1*	NOK OK	U16	2	RO
156	11	Envelope 1 NOK counter	*32bit-Integer value >= 0*		U32	4	RO
156	12	Envelope 1 entry coordinate X-coordinate	*Float value*	Float according to IEEE754	FLT	4	RO
156	13	Envelope 1 entry coordinate Y-coordinate	*Float value*	Float according to IEEE754	FLT	4	RO

Slot	Index	Description	Value	Meaning of value	Type	Len	R/W
156	14	Envelope 1 exit coordinate X-coordinate	*Float value*	Float according to IEEE754	FLT	4	RO
156	15	Envelope 1 exit coordinate Y-coordinate	*Float value*	Float according to IEEE754	FLT	4	RO

9.2.58 Evaluation results envelope 2

Slot	Index	Description	Value	Meaning of value	Type	Len	R/W
157	0	Not possible	-	-		X	X
157	1…9	Reserved	-	-		X	X
157	10…	See slot 156				X	X

9.2.59 Evaluation results rotary switch evaluation element 1

Slot	Index	Description	Value	Meaning of value	Type	Len	R/W
158	0	Not possible	-	-		X	X
158	1…9	Reserved	-	-		X	X
158	10	Rotary switch evaluation element 1 quantity minima	*0…32*		U16	2	RO
158	11	Rotary switch evaluation element 1 quantity maxima	*0…32*		U16	2	RO
158	12	Rotary switch evaluation element 1 mean value minima	*Float value*	Float according to IEEE754	FLT	4	RO
158	13	Rotary switch evaluation element 1 mean value maxima	*Float value*	Float according to IEEE754	FLT	4	RO
158	14	Rotary switch evaluation element 1 Max. Y-Diff. minima	*Float value*	Float according to IEEE754	FLT	4	RO
158	15	Rotary switch evaluation element 1 Max. Y-Diff. maxima	*Float value*	Float according to IEEE754	FLT	4	RO
158	16	Rotary switch evaluation element 1 evaluation result	*0* *1*	NOK OK	U16	2	RO
158	17	Rotary switch evaluation element 1 X-coord. minima 1	*Float value*	Float according to IEEE754	FLT	4	RO
158	18	Rotary switch evaluation element 1 X-coord. minima 2	*Float value*	Float according to IEEE754	FLT	4	RO
158	19	Rotary switch	*Float value*	Float according to IEEE754	FLT	4	RO

Slot	Index	Description	Value	Meaning of value	Type	Len	R/W
		evaluation element 1 X-coord. minima 3					
158	20	Rotary switch evaluation element 1 X-coord. minima 4	*Float value*	Float according to IEEE754	FLT	4	RO
158	21	Rotary switch evaluation element 1 X-coord. minima 5	*Float value*	Float according to IEEE754	FLT	4	RO
158	22	Rotary switch evaluation element 1 X-coord. minima 6	*Float value*	Float according to IEEE754	FLT	4	RO
158	23	Rotary switch evaluation element 1 X-coord. minima 7	*Float value*	Float according to IEEE754	FLT	4	RO
158	24	Rotary switch evaluation element 1 X-coord. minima 8	*Float value*	Float according to IEEE754	FLT	4	RO

Slot	Index	Description	Value	Meaning of value	Type	Len	R/W
158	25	Rotary switch evaluation element 1 X-coord. minima 9	*Float value*	Float according to IEEE754	FLT	4	RO
158	26	Rotary switch evaluation element 1 X-coord. minima 10	*Float value*	Float according to IEEE754	FLT	4	RO
158	27	Rotary switch evaluation element 1 X-coord. minima 11	*Float value*	Float according to IEEE754	FLT	4	RO
158	28	Rotary switch evaluation element 1 X-coord. minima 12	*Float value*	Float according to IEEE754	FLT	4	RO
158	29	Rotary switch evaluation element 1 X-coord. minima 13	*Float value*	Float according to IEEE754	FLT	4	RO
158	30	Rotary switch evaluation element 1 X-coord. minima 14	*Float value*	Float according to IEEE754	FLT	4	RO
158	31	Rotary switch evaluation element 1 X-coord. minima 15	*Float value*	Float according to IEEE754	FLT	4	RO
158	32	Rotary switch evaluation element 1 X-coord. minima 16	*Float value*	Float according to IEEE754	FLT	4	RO
158	33	Rotary switch evaluation element 1 X-coord. minima 17	*Float value*	Float according to IEEE754	FLT	4	RO
158	34	Rotary switch evaluation element 1 X-coord. minima 18	*Float value*	Float according to IEEE754	FLT	4	RO
158	35	Rotary switch evaluation element 1 X-coord. minima 19	*Float value*	Float according to IEEE754	FLT	4	RO
158	36	Rotary switch evaluation element 1 X-coord. minima 20	*Float value*	Float according to IEEE754	FLT	4	RO
158	37	Rotary switch evaluation element 1 X-coord. minima 21	*Float value*	Float according to IEEE754	FLT	4	RO
158	38	Rotary switch evaluation element 1 X-coord. minima 22	*Float value*	Float according to IEEE754	FLT	4	RO
158	39	Rotary switch evaluation element 1 X-coord. minima 23	*Float value*	Float according to IEEE754	FLT	4	RO
158	40	Rotary switch evaluation element 1 X-coord. minima 24	*Float value*	Float according to IEEE754	FLT	4	RO
158	41	Rotary switch evaluation element 1 X-coord. minima 25	*Float value*	Float according to IEEE754	FLT	4	RO

Slot	Index	Description	Value	Meaning of value	Type	Len	R/W
158	42	Rotary switch evaluation element 1 X-coord. minima 26	*Float value*	Float according to IEEE754	FLT	4	RO
158	43	Rotary switch evaluation element 1 X-coord. minima 27	*Float value*	Float according to IEEE754	FLT	4	RO
158	44	Rotary switch evaluation element 1 X-coord. minima 28	*Float value*	Float according to IEEE754	FLT	4	RO
158	45	Rotary switch evaluation element 1 X-coord. minima 29	*Float value*	Float according to IEEE754	FLT	4	RO
158	46	Rotary switch evaluation element 1 X-coord. minima 30	*Float value*	Float according to IEEE754	FLT	4	RO
158	47	Rotary switch evaluation element 1 X-coord. minima 31	*Float value*	Float according to IEEE754	FLT	4	RO
158	48	Rotary switch evaluation element 1 X-coord. minima 32	*Float value*	Float according to IEEE754	FLT	4	RO
158	49	Rotary switch evaluation element 1 Y-coord. minima 1	*Float value*	Float according to IEEE754	FLT	4	RO
158	50	Rotary switch evaluation element 1 Y-coord. minima 2	*Float value*	Float according to IEEE754	FLT	4	RO
158	51	Rotary switch evaluation element 1 Y-coord. minima 3	*Float value*	Float according to IEEE754	FLT	4	RO
158	52	Rotary switch evaluation element 1 Y-coord. minima 4	*Float value*	Float according to IEEE754	FLT	4	RO
158	53	Rotary switch evaluation element 1 Y-coord. minima 5	*Float value*	Float according to IEEE754	FLT	4	RO
158	54	Rotary switch evaluation element 1 Y-coord. minima 6	*Float value*	Float according to IEEE754	FLT	4	RO
158	55	Rotary switch evaluation element 1 Y-coord. minima 7	*Float value*	Float according to IEEE754	FLT	4	RO
158	56	Rotary switch evaluation element 1 Y-coord. minima 8	*Float value*	Float according to IEEE754	FLT	4	RO
158	57	Rotary switch evaluation element 1 Y-coord. minima 9	*Float value*	Float according to IEEE754	FLT	4	RO
158	58	Rotary switch evaluation element 1 Y-coord. minima 10	*Float value*	Float according to IEEE754	FLT	4	RO

Slot	Index	Description	Value	Meaning of value	Type	Len	R/W
158	59	Rotary switch evaluation element 1 Y-coord. minima 11	*Float value*	Float according to IEEE754	FLT	4	RO
158	60	Rotary switch evaluation element 1 Y-coord. minima 12	*Float value*	Float according to IEEE754	FLT	4	RO
158	61	Rotary switch evaluation element 1 Y-coord. minima 13	*Float value*	Float according to IEEE754	FLT	4	RO
158	62	Rotary switch evaluation element 1 Y-coord. minima 14	*Float value*	Float according to IEEE754	FLT	4	RO
158	63	Rotary switch evaluation element 1 Y-coord. minima 15	*Float value*	Float according to IEEE754	FLT	4	RO
158	64	Rotary switch evaluation element 1 Y-coord. minima 16	*Float value*	Float according to IEEE754	FLT	4	RO
158	65	Rotary switch evaluation element 1 Y-coord. minima 17	*Float value*	Float according to IEEE754	FLT	4	RO
158	66	Rotary switch evaluation element 1 Y-coord. minima 18	*Float value*	Float according to IEEE754	FLT	4	RO
158	67	Rotary switch evaluation element 1 Y-coord. minima 19	*Float value*	Float according to IEEE754	FLT	4	RO
158	68	Rotary switch evaluation element 1 Y-coord. minima 20	*Float value*	Float according to IEEE754	FLT	4	RO
158	69	Rotary switch evaluation element 1 Y-coord. minima 21	*Float value*	Float according to IEEE754	FLT	4	RO
158	70	Rotary switch evaluation element 1 Y-coord. minima 22	*Float value*	Float according to IEEE754	FLT	4	RO
158	71	Rotary switch evaluation element 1 Y-coord. minima 23	*Float value*	Float according to IEEE754	FLT	4	RO
158	72	Rotary switch evaluation element 1 Y-coord. minima 24	*Float value*	Float according to IEEE754	FLT	4	RO
158	73	Rotary switch evaluation element 1 Y-coord. minima 25	*Float value*	Float according to IEEE754	FLT	4	RO
158	74	Rotary switch evaluation element 1 Y-coord. minima 26	*Float value*	Float according to IEEE754	FLT	4	RO
158	75	Rotary switch evaluation element 1 Y-coord. minima 27	*Float value*	Float according to IEEE754	FLT	4	RO

Slot	Index	Description	Value	Meaning of value	Type	Len	R/W
158	76	Rotary switch evaluation element 1 Y-coord. minima 28	*Float value*	Float according to IEEE754	FLT	4	RO
158	77	Rotary switch evaluation element 1 Y-coord. minima 29	*Float value*	Float according to IEEE754	FLT	4	RO
158	78	Rotary switch evaluation element 1 Y-coord. minima 30	*Float value*	Float according to IEEE754	FLT	4	RO
158	79	Rotary switch evaluation element 1 Y-coord. minima 31	*Float value*	Float according to IEEE754	FLT	4	RO
158	80	Rotary switch evaluation element 1 Y-coord. minima 32	*Float value*	Float according to IEEE754	FLT	4	RO
158	81	Rotary switch evaluation element 1 X-coord. maxima 1	*Float value*	Float according to IEEE754	FLT	4	RO
158	82	Rotary switch evaluation element 1 X-coord. maxima 2	*Float value*	Float according to IEEE754	FLT	4	RO
158	83	Rotary switch evaluation element 1 X-coord. maxima 3	*Float value*	Float according to IEEE754	FLT	4	RO
158	84	Rotary switch evaluation element 1 X-coord. maxima 4	*Float value*	Float according to IEEE754	FLT	4	RO
158	85	Rotary switch evaluation element 1 X-coord. maxima 5	*Float value*	Float according to IEEE754	FLT	4	RO
158	86	Rotary switch evaluation element 1 X-coord. maxima 6	*Float value*	Float according to IEEE754	FLT	4	RO
158	87	Rotary switch evaluation element 1 X-coord. maxima 7	*Float value*	Float according to IEEE754	FLT	4	RO
158	88	Rotary switch evaluation element 1 X-coord. maxima 8	*Float value*	Float according to IEEE754	FLT	4	RO
158	89	Rotary switch evaluation element 1 X-coord. maxima 9	*Float value*	Float according to IEEE754	FLT	4	RO
158	90	Rotary switch evaluation element 1 X-coord. maxima 10	*Float value*	Float according to IEEE754	FLT	4	RO
158	91	Rotary switch evaluation element 1 X-coord. maxima 11	*Float value*	Float according to IEEE754	FLT	4	RO
158	92	Rotary switch evaluation element 1 X-coord. maxima 12	*Float value*	Float according to IEEE754	FLT	4	RO

Slot	Index	Description	Value	Meaning of value	Type	Len	R/W
158	93	Rotary switch evaluation element 1 X-coord. maxima 13	*Float value*	Float according to IEEE754	FLT	4	RO
158	94	Rotary switch evaluation element 1 X-coord. maxima 14	*Float value*	Float according to IEEE754	FLT	4	RO
158	95	Rotary switch evaluation element 1 X-coord. maxima 15	*Float value*	Float according to IEEE754	FLT	4	RO
158	96	Rotary switch evaluation element 1 X-coord. maxima 16	*Float value*	Float according to IEEE754	FLT	4	RO
158	97	Rotary switch evaluation element 1 X-coord. maxima 17	*Float value*	Float according to IEEE754	FLT	4	RO
158	98	Rotary switch evaluation element 1 X-coord. maxima 18	*Float value*	Float according to IEEE754	FLT	4	RO
158	99	Rotary switch evaluation element 1 X-coord. maxima 19	*Float value*	Float according to IEEE754	FLT	4	RO
158	100	Rotary switch evaluation element 1 X-coord. maxima 20	*Float value*	Float according to IEEE754	FLT	4	RO
158	101	Rotary switch evaluation element 1 X-coord. maxima 21	*Float value*	Float according to IEEE754	FLT	4	RO
158	102	Rotary switch evaluation element 1 X-coord. maxima 22	*Float value*	Float according to IEEE754	FLT	4	RO
158	103	Rotary switch evaluation element 1 X-coord. maxima 23	*Float value*	Float according to IEEE754	FLT	4	RO
158	104	Rotary switch evaluation element 1 X-coord. maxima 24	*Float value*	Float according to IEEE754	FLT	4	RO
158	105	Rotary switch evaluation element 1 X-coord. maxima 25	*Float value*	Float according to IEEE754	FLT	4	RO
158	106	Rotary switch evaluation element 1 X-coord. maxima 26	*Float value*	Float according to IEEE754	FLT	4	RO
158	107	Rotary switch evaluation element 1 X-coord. maxima 27	*Float value*	Float according to IEEE754	FLT	4	RO
158	108	Rotary switch evaluation element 1 X-coord. maxima 28	*Float value*	Float according to IEEE754	FLT	4	RO
158	109	Rotary switch evaluation element 1 X-coord. maxima 29	*Float value*	Float according to IEEE754	FLT	4	RO

Slot	Index	Description	Value	Meaning of value	Type	Len	R/W
158	110	Rotary switch evaluation element 1 X-coord. maxima 30	*Float value*	Float according to IEEE754	FLT	4	RO
158	111	Rotary switch evaluation element 1 X-coord. maxima 31	*Float value*	Float according to IEEE754	FLT	4	RO
158	112	Rotary switch evaluation element 1 X-coord. maxima 32	*Float value*	Float according to IEEE754	FLT	4	RO
158	113	Rotary switch evaluation element 1 Y-coord. maxima 1	*Float value*	Float according to IEEE754	FLT	4	RO
158	114	Rotary switch evaluation element 1 Y-coord. maxima 2	*Float value*	Float according to IEEE754	FLT	4	RO
158	115	Rotary switch evaluation element 1 Y-coord. maxima 3	*Float value*	Float according to IEEE754	FLT	4	RO
158	116	Rotary switch evaluation element 1 Y-coord. maxima 4	*Float value*	Float according to IEEE754	FLT	4	RO
158	117	Rotary switch evaluation element 1 Y-coord. maxima 5	*Float value*	Float according to IEEE754	FLT	4	RO
158	118	Rotary switch evaluation element 1 Y-coord. maxima 6	*Float value*	Float according to IEEE754	FLT	4	RO
158	119	Rotary switch evaluation element 1 Y-coord. maxima 7	*Float value*	Float according to IEEE754	FLT	4	RO
158	120	Rotary switch evaluation element 1 Y-coord. maxima 8	*Float value*	Float according to IEEE754	FLT	4	RO
158	121	Rotary switch evaluation element 1 Y-coord. maxima 9	*Float value*	Float according to IEEE754	FLT	4	RO
158	122	Rotary switch evaluation element 1 Y-coord. maxima 10	*Float value*	Float according to IEEE754	FLT	4	RO
158	123	Rotary switch evaluation element 1 Y-coord. maxima 11	*Float value*	Float according to IEEE754	FLT	4	RO
158	124	Rotary switch evaluation element 1 Y-coord. maxima 12	*Float value*	Float according to IEEE754	FLT	4	RO
158	125	Rotary switch evaluation element 1 Y-coord. maxima 13	*Float value*	Float according to IEEE754	FLT	4	RO
158	126	Rotary switch evaluation element 1 Y-coord. maxima 14	*Float value*	Float according to IEEE754	FLT	4	RO

Slot	Index	Description	Value	Meaning of value	Type	Len	R/W
158	127	Rotary switch evaluation element 1 Y-coord. maxima 15	*Float value*	Float according to IEEE754	FLT	4	RO
158	128	Rotary switch evaluation element 1 Y-coord. maxima 16	*Float value*	Float according to IEEE754	FLT	4	RO
158	129	Rotary switch evaluation element 1 Y-coord. maxima 17	*Float value*	Float according to IEEE754	FLT	4	RO
158	130	Rotary switch evaluation element 1 Y-coord. maxima 18	*Float value*	Float according to IEEE754	FLT	4	RO
158	131	Rotary switch evaluation element 1 Y-coord. maxima 19	*Float value*	Float according to IEEE754	FLT	4	RO
158	132	Rotary switch evaluation element 1 Y-coord. maxima 20	*Float value*	Float according to IEEE754	FLT	4	RO
158	133	Rotary switch evaluation element 1 Y-coord. maxima 21	*Float value*	Float according to IEEE754	FLT	4	RO
158	134	Rotary switch evaluation element 1 Y-coord. maxima 22	*Float value*	Float according to IEEE754	FLT	4	RO
158	135	Rotary switch evaluation element 1 Y-coord. maxima 23	*Float value*	Float according to IEEE754	FLT	4	RO
158	136	Rotary switch evaluation element 1 Y-coord. maxima 24	*Float value*	Float according to IEEE754	FLT	4	RO
158	137	Rotary switch evaluation element 1 Y-coord. maxima 25	*Float value*	Float according to IEEE754	FLT	4	RO
158	138	Rotary switch evaluation element 1 Y-coord. maxima 26	*Float value*	Float according to IEEE754	FLT	4	RO
158	139	Rotary switch evaluation element 1 Y-coord. maxima 27	*Float value*	Float according to IEEE754	FLT	4	RO
158	140	Rotary switch evaluation element 1 Y-coord. maxima 28	*Float value*	Float according to IEEE754	FLT	4	RO
158	141	Rotary switch evaluation element 1 Y-coord. maxima 29	*Float value*	Float according to IEEE754	FLT	4	RO
158	142	Rotary switch evaluation element 1 Y-coord. maxima 30	*Float value*	Float according to IEEE754	FLT	4	RO
158	143	Rotary switch evaluation element 1 Y-coord. maxima 31	*Float value*	Float according to IEEE754	FLT	4	RO

Slot	Index	Description	Value	Meaning of value	Type	Len	R/W
158	144	Rotary switch evaluation element 1 Y-coord. maxima 32	*Float value*	Float according to IEEE754	FLT	4	RO

9.2.60 Evaluation results rotary switch evaluation element 2

Slot	Index	Description	Value	Meaning of value	Type	Len	R/W
159	0	Not possible	-	-		X	X
159	1…9	Reserved	-	-		X	X
159	10…	See slot 158				X	X

9.2.61 Evaluation results mathematical functions

Slot	Index	Description	Value	Meaning of value	Type	Len	R/W
160	0	Not possible	-	-		X	X
160	1…9	Reserved	-	-		X	X
160	10	Math. functions evaluation result line 1	*0* *1*	NOK OK	U16	2	RO
160	11	Math. functions evaluation result line 2	*0* *1*	NOK OK	U16	2	RO
160	12	Math. functions evaluation result line 3	*0* *1*	NOK OK	U16	2	RO
160	13	Math. functions evaluation result line 4	*0* *1*	NOK OK	U16	2	RO
160	14	Math. functions evaluation result line 5	*0* *1*	NOK OK	U16	2	RO
160	15	Math. functions evaluation result line 6	*0* *1*	NOK OK	U16	2	RO
160	16	Math. functions NOK counter line 1	*32bit-Integer value >= 0*		U32	4	RO
160	17	Math. functions NOK counter line 2	*32bit-Integer value >= 0*		U32	4	RO
160	18	Math. functions NOK counter line 3	*32bit-Integer value >= 0*		U32	4	RO
160	19	Math. functions NOK counter line 4	*32bit-Integer value >= 0*		U32	4	RO
160	20	Math. functions NOK counter line 5	*32bit-Integer value >= 0*		U32	4	RO
160	21	Math. functions NOK counter line 6	*32bit-Integer value >= 0*		U32	4	RO

9.2.62 Combined results (common curve data and evalution elements)

Slot	Index	Description	Value	Meaning of value	Type	Len	R/W
161	0	Not possible	-			X	X
161	1…9	Reserved	-			X	X
161	10	Combined results: general curve data Y1	*The data is bit coded and transmitted as STRUCT.* X-minimum, X-coord. (FL) X-minimum, Y1-coord. (FL) X-maximum, X-coord. (FL) X-maximum, Y1-coord. (FL) Y1-minimum, X-coord. (FL) Y1-minimum, Y1-coord.(FL) Y1-maximum, X-coord. (FL) Y1-maximum, Y1-coord.(FL) First value X-coord. (FL) First value Y1-coord. (FL) Last value X-coord. (FL) Last value Y1-coord. (FL) Return point X-coord. (FL) Return point Y1-coord. (FL)		STRUCT OF FLOATS	56	RO
161	11	Combined results: general curve data Y2	*See attribute 10*		STRUCT OF FLOATS	56	RO
161	12	Combined results: window 1	*The data is bit coded and transmitted as STRUCT.* Evaluation result (UINT32) Entry X-coordinate (FL) Entry Y-coordinate (FL) Exit X-coordinate (FL) Exit Y-coordinate (FL) Absolute Ymax X-coord. (FL) Absolute Ymax Y- coord.(FL) Absolute Ymin X- coord. (FL) Absolute Ymin Y- coord. (FL) Local Ymax X-coord. (FL) Local Ymax Y-coord. (FL) Local Ymin X-coord. (FL) Local Ymin Y-coord. (FL) Bending point X-coord. (FL) Bending point Y-coord. (FL) Mean value Y (FL) Gradient (FL) Area (FL) Window Xmin coord. (FL) Window Xmax coord. (FL) Window Ymin coord. (FL) Window Ymax coord. (FL)		STRUCT	88	RO
161	13	Combined results: window 2	*See index 12*		STRUCT	88	RO
161	14	Combined results: window 3	*See index 12*		STRUCT	88	RO

Slot	Index	Description	Value	Meaning of value	Type	Len	R/W
161	15	Combined results: window 4	*See index 12*		STRUCT	88	RO
161	16	Combined results: window 5	*See index 12*		STRUCT	88	RO
161	17	Combined results: window 6	*See index 12*		STRUCT	88	RO
161	18	Combined results: window 7	*See index 12*		STRUCT	88	RO
161	20	Combined results: window 9	*See index 12*		STRUCT	88	RO
161	21	Combined results: window 10	*See index 12*		STRUCT	88	RO
161	22	Combined results: threshold 1	*The data is bit coded and transmitted as STRUCT:* Evaluation result (UINT16) Threshold type (UINT16) Threshold pass X (FL) Threshold pass Y (FL) Absolute Ymax X-coord. (FL) Absolute Ymax Y- coord. (FL) Absolute Ymin X- coord. (FL) Absolute Ymin Y- coord. (FL) Local Ymax X-coord. (FL) Local Ymax Y-coord. (FL) Local Ymin X-coord. (FL) Local Ymin Y-coord. (FL) Bending point X-coord. (FL) Bending point Y-coord. (FL) Mean value Y (FL) Gradient (FL) Area (FL) Threshold position (FL) Threshold min coord. (FL) Threshold max coord. (FL)		STRUCT	76	RO
161	23	Combined results: threshold 2	*See index 22*		STRUCT	76	RO
161	24	Combined results: threshold 3	*See index 22*		STRUCT	76	RO
161	25	Combined results: threshold 4	*See index 22*		STRUCT	76	RO
161	26	Combined results: trapezoid window X1	*The data is bit coded and transmitted as STRUCT:* Evaluation result (UINT32) Entry X-coord. (FL) Entry Y-coord. (FL) Exit X-coord. (FL) Exit Y-coord. (FL) Xmin (FL) Xmax (FL) Ymax left (FL) Ymax right (FL) Ymin left (FL) Ymin right (FL)		STRUCT	44	RO

Slot	Index	Description	Value	Meaning of value	Type	Len	R/W
161	27	Combined results: trapezoid window X2	*See index 26*		STRUCT	44	RO
161	28	Combined results: trapezoid window Y1	*The data is bit coded and transmitted as STRUCT:* Evaluation result (UINT32) Entry X-coord. (FL) Entry Y-coord. (FL) Exit X-coord. (FL) Exit Y-coord. (FL) Ymin (FL) Ymax (FL) Xmin top (FL) Xmax top (FL) Xmin bottom (FL) Xmax bottom (FL)		STRUCT	44	RO
161	29	Combined results: trapezoid window Y2	*See index 28*		STRUCT	44	RO
161	30	Combined results: envelope 1	*The data is bit coded and transmitted as STRUCT:* Evaluation result (UINT32) Entry X-coordinate (FL) Entry Y-coordinate (FL) Exit X-coordinate (FL) Exit Y-coordinate (FL) Envelope 1 start (FL) Envelope 1 end (FL) Delta min (FL) Delta max (FL)		STRUCT	36	RO
161	31	Combined results: envelope 2	*See index 30*		STRUCT	36	RO

10 Appendix

10.1 Operand table for mathematical functions

Number	ID of operant
0	OFF
100	Intermediate Result 1
101	Intermediate Result 2
102	Intermediate Result 3
103	Intermediate Result 4
104	Intermediate Result 5
105	Intermediate Result 6
106	Intermediate Result 7
107	Intermediate Result 8
108	Intermediate Result 9
109	Intermediate Result 10
200	Constant 1
201	Constant 2
202	Constant 3
203	Constant 4
204	Constant 5
205	Constant 6
206	Constant 7
207	Constant 8
208	Constant 9
209	Constant 10
300	General curve data Y1 – Start X
301	General curve data Y1 – Start Y
302	General curve data Y1 – End X

Number	ID of operant
303	General curve data Y1 – End Y
304	General curve data Y1 – Abs. Xmax X-coordinate
305	General curve data Y1 – Abs. Xmax Y-coordinate
306	General curve data Y1 – Abs. Xmin X-coordinate
307	General curve data Y1 – Abs. Xmin Y-coordinate
308	General curve data Y1 – Abs. Ymax X-coordinate
309	General curve data Y1 – Abs. Ymax Y-coordinate
310	General curve data Y1 – Abs. Ymin X-coordinate
311	General curve data Y1 – Abs. Ymin Y-coordinate
312	General curve data Y1 – Return point X-coordinate
313	General curve data Y1 – Return point Y-coordinate
314	Reference point
400	General curve data Y2 – Start X
401	General curve data Y2 – Start Y
402	General curve data Y2 – End X
403	General curve data Y2 –End Y
404	General curve data Y2 – Abs- Xmax X-coordinate
405	General curve data Y2 – Abs. Xmax Y-coordinate
406	General curve data Y2 – Abs. Xmin X-coordinate
407	General curve data Y2 – Abs. Xmin Y-coordinate
408	General curve data Y2 – Abs. Ymax X-coordinate
409	General curve data Y2 – Abs. Ymax Y-coordinate
410	General curve data Y2 – Abs. Ymin X-coordinate
411	General curve data Y2 – Abs. Ymin Y-coordinate
412	General curve data Y2 – Return point X-coordinate
413	General curve data Y2 – Return point Y-coordinate
414	Reference point

Number	ID of operant
500	Window 1 – Entry X
501	Window 1 – Entry Y
502	Window 1 – Exit X
503	Window 1 – Exit Y
504	Window 1 – Abs. minimum X
505	Window 1 – Abs. minimum Y
506	Window 1 – Abs. maximum X
507	Window 1 – Abs. maximum Y
508	Window 1 – Loc. minimum X
509	Window 1 – Loc. minimum Y
510	Window 1 – Loc. maximum X
511	Window 1 – Loc. maximum Y
512	Window 1 – Bend X
513	Window 1 – Bend Y
514	Window 1 – Mean value Y
515	Window 1 – Gradient
516	Window 1 – Area
517	Window 1 – Coordinate Xmin
518	Window 1 – Coordinate Xmax
519	Window 1 – Coordinate Ymin
520	Window 1 – Coordinate Ymax
600	Window 2 – Entry X
601	Window 2 – Entry Y
602	Window 2 – Exit X
603	Window 2 – Exit Y
604	Window 2 – Abs. minimum X
605	Window 2 – Abs. minimum Y
606	Window 2 – Abs. maximum X

Number	ID of operant
607	Window 2 – Abs. maximum Y
608	Window 2 – Loc. minimum X
609	Window 2 – Loc. minimum Y
610	Window 2 – Loc. maximum X
611	Window 2 – Loc. maximum Y
612	Window 2 – Bend X
613	Window 2 – Bend Y
614	Window 2 – Mean value Y
615	Window 2 – Gradient
616	Window 2 – Area
617	Window 2 – Coordinate Xmin
618	Window 2 – Coordinate Xmax
619	Window 2 – Coordinate Ymin
620	Window 2 – Coordinate Ymax
700	Window 3 – Entry X
701	Window 3 – Entry Y
702	Window 3 – Exit X
703	Window 3 – Exit Y
704	Window 3 – Abs. minimum X
705	Window 3 – Abs. minimum Y
706	Window 3 – Abs. maximum X
707	Window 3 – Abs. maximum Y
708	Window 3 – Loc. minimum X
709	Window 3 – Loc. maximum Y
710	Window 3 – Loc. maximum X
711	Window 3 – Loc. maximum Y
712	Window 3 – Bend X
713	Window 3 – Bend Y

Number	ID of operant
714	Window 3 – Mean value Y
715	Window 3 – Gradient
716	Window 3 – Area
717	Window 3 – Coordinate Xmin
718	Window 3 – Coordinate Xmax
719	Window 3 – Coordinate Ymin
720	Window 3 – Coordinate Ymax
800	Window 4 – Entry X
801	Window 4 – Entry Y
802	Window 4 – Exit X
803	Window 4 – Exit Y
804	Window 4 – Abs. minimum X
805	Window 4 – Abs. minimum Y
806	Window 4 – Abs. maximum X
807	Window 4 – Abs. maximum Y
808	Window 4 – Loc. minimum X
809	Window 4 – Loc. minimum Y
810	Window 4 – Loc. maximum X
811	Window 4 – Loc. maximum Y
812	Window 4 – Bend X
813	Window 4 – Bend Y
814	Window 4 – Mean value Y
815	Window 4 – Gradient
816	Window 4 – Area
817	Window 4 – Coordinate Xmin
818	Window 4 – Coordinate Xmax
819	Window 4 – Coordinate Ymin
820	Window 4 – Coordinate Ymax

Number	ID of operant
900	Window 5 – Entry X
901	Window 5 – Entry Y
902	Window 5 – Exit X
903	Window 5 – Exit Y
904	Window 5 – Abs. minimum X
905	Window 5 – Abs. minimum Y
906	Window 5 – Abs. maximum X
907	Window 5 – Abs. maximum Y
908	Window 5 – Loc. minimum X
909	Window 5 – Loc. minimum Y
910	Window 5 – Loc. maximum X
911	Window 5 – Loc. maximum Y
912	Window 5 – Bend X
913	Window 5 – Bend Y
914	Window 5 – Mean value Y
915	Window 5 – Gradient
916	Window 5 – Area
917	Window 5 – Coordinate Xmin
918	Window 5 – Coordinate Xmax
919	Window 5 – Coordinate Ymin
920	Window 5 – Coordinate Ymax
1000	Window 6 – Entry X
1001	Window 6 – Entry Y
1002	Window 6 – Exit X
1003	Window 6 – Exit Y
1004	Window 6 – Abs. minimum X
1005	Window 6 – Abs. maximum Y

Number	ID of operant
1006	Window 6 – Abs. maximum X
1007	Window 6 – Abs. maximum Y
1008	Window 6 – Loc. minimum X
1009	Window 6 – Loc. minimum Y
1010	Window 6 – Loc. maximum X
1011	Window 6 – Loc. maximum Y
1012	Window 6 – Bend X
1013	Window 6 – Bend Y
1014	Window 6 – Mean value Y
1015	Window 6 – Gradient
1016	Window 6 – Area
1017	Window 6 – Coordinate Xmin
1018	Window 6 – Coordinate Xmax
1019	Window 6 – Coordinate Ymin
1020	Window 6 – Coordinate Ymax
1100	Window 7 – Entry X
1101	Window 7 – Entry Y
1102	Window 7 – Exit X
1103	Window 7 – Exit Y
1104	Window 7 – Abs. minimum X
1105	Window 7 – Abs. minimum Y
1106	Window 7 – Abs. maximum X
1107	Window 7 – Abs. maximum Y
1108	Window 7 – Loc. minimum X
1109	Window 7 – Loc. minimum Y
1110	Window 7 – Loc. maximum X
1111	Window 7 – Loc. maximum Y
1112	Window 7 – Bend X

Number	ID of operant
1113	Window 7 – Bend Y
1114	Window 7 – Mean value Y
1115	Window 7 – Gradient
1116	Window 7 – Area
1117	Window 7 – Coordinate Xmin
1118	Window 7 – Coordinate Xmax
1119	Window 7 – Coordinate Ymin
1120	Window 7 – Coordinate Ymax
1200	Window 8 – Entry X
1201	Window 8 – Entry Y
1202	Window 8 – Exit X
1203	Window 8 – Exit Y
1204	Window 8 – Abs. minimum X
1205	Window 8 – Abs. minimum Y
1206	Window 8 – Abs. maximum X
1207	Window 8 – Abs. maximum Y
1208	Window 8 – Loc. minimum X
1209	Window 8 – Loc. minimum Y
1210	Window 8 – Loc. maximum X
1211	Window 8 – Loc. maximum Y
1212	Window 8 – Bend X
1213	Window 8 – Bend Y
1214	Window 8 – Mean value Y
1215	Window 8 – Gradient
1216	Window 8 – Area
1217	Window 8 – Coordinate Xmin
1218	Window 8 – Coordinate Xmax
1219	Window 8 – Coordinate Ymin

Number	ID of operant
1220	Window 8 – Coordinate Ymax
1300	Window 9 – Entry X
1301	Window 9 – Entry Y
1302	Window 9 – Exit X
1303	Window 9 – Exit Y
1304	Window 9 – Abs. minimum X
1305	Window 9 – Abs. minimum Y
1306	Window 9 – Abs. maximum X
1307	Window 9 – Abs. maximum Y
1308	Window 9 – Loc. minimum X
1309	Window 9 – Loc. minimum Y
1310	Window 9 – Loc. maximum X
1311	Window 9 – Loc. maximum Y
1312	Window 9 – Bend X
1313	Window 9 – Bend Y
1314	Window 9 – Mean value Y
1315	Window 9 – Gradient
1316	Window 9 – Area
1317	Window 9 – Coordinate Xmin
1318	Window 9 – Coordinate Xmax
1319	Window 9 – Coordinate Ymin
1320	Window 9 – Coordinate Ymax
1400	Window 10 – Entry X
1401	Window 10 – Entry Y
1402	Window 10 – Exit X
1403	Window 10 – Exit Y
1404	Window 10 – Abs. minimum X

Number	ID of operant
1405	Window 10 – Abs. minimum Y
1406	Window 10 – Abs. maximum X
1407	Window 10 – Abs. maximum Y
1408	Window 10 – Loc. minimum X
1409	Window 10 – Loc. minimum Y
1410	Window 10 – Loc. maximum X
1411	Window 10 – Loc. maximum Y
1412	Window 10 – Bend X
1413	Window 10 – Bend Y
1414	Window 10 – Mean value Y
1415	Window 10 – Gradient
1416	Window 10 – Area
1417	Window 10 – Coordinate Xmin
1418	Window 10 – Coordinate Xmax
1419	Window 10 – Coordinate Ymin
1420	Window 10 – Coordinate Ymax
1500	Trapezoid window X1 – Entry X
1501	Trapezoid window X1 – Entry Y
1502	Trapezoid window X1 – Exit X
1503	Trapezoid window X1 – Exit Y
1504	Trapezoid window X1 – Coordinate Xmin
1505	Trapezoid window X1 – Coordinate Xmax
1506	Trapezoid window X1 – Coordinate Ymin left
1507	Trapezoid window X1 – Coordinate Ymin right
1508	Trapezoid window X1 – Coordinate Ymax left
1509	Trapezoid window X1 – Coordinate Ymax right
1600	Trapezoid window X2 – Entry X

Number	ID of operant
1601	Trapezoid window X2 – Entry Y
1602	Trapezoid window X2 – Exit X
1603	Trapezoid window X2 – Exit Y
1604	Trapezoid window X2 – Coordinate Xmin
1605	Trapezoid window X2 – Coordinate Xmax
1606	Trapezoid window X2 – Coordinate Ymin left
1607	Trapezoid window X2 – Coordinate Ymin right
1608	Trapezoid window X2 – Coordinate Ymax left
1609	Trapezoid window X2 – Coordinate Ymax right
1700	Trapezoid window Y1 – Entry X
1701	Trapezoid window Y1 – Entry Y
1702	Trapezoid window Y1 – Exit X
1703	Trapezoid window Y1 – Exit Y
1704	Trapezoid window Y1 – Coordinate Ymin
1705	Trapezoid window Y1 – Coordinate Ymax
1706	Trapezoid window Y1 – Coordinate Xmin bottom
1707	Trapezoid window Y1 –Coordinate Xmin top
1708	Trapezoid window Y1 – Coordinate Xmax bottom
1709	Trapezoid window Y1 – Coordinate Xmax top
1800	Trapezoid window Y2 – Entry X
1801	Trapezoid window Y2 – Entry Y
1802	Trapezoid window Y2 – Exit X
1803	Trapezoid window Y2 – Exit Y
1804	Trapezoid window Y2 – Coordinate Ymin
1805	Trapezoid window Y2 – Coordinate Ymax
1806	Trapezoid window Y2 .- Coordinate Xmin bottom
1807	Trapezoid window Y2 – Coordinate Xmin top

Number	ID of operant
1808	Trapezoid window Y2 – Coordinate Xmax bottom
1809	Trapezoid window Y2 – Coordinate Xmax top
1900	Threshold 1 – Pass X
1901	Threshold 1 – Pass Y
1902	Threshold 1 – Abs. minimum X
1903	Threshold 1 – Abs. minimum Y
1904	Threshold 1 – Abs. maximum X
1905	Threshold 1 – Abs. maximum Y
1906	Threshold 1 – Loc. minimum X
1907	Threshold 1 – Loc. minimum Y
1908	Threshold 1 – Loc. maximum X
1909	Threshold 1 – Loc. maximum Y
1910	Threshold 1 – Bend X
1911	Threshold 1 – Bend Y
1912	Threshold 1 – Mean value Y
1913	Threshold 1 – Gradient
1914	Threshold 1 – Area
1915	Threshold 1 – Coordinate X value
1916	Threshold 1 – Coordinate Ymin
1917	Threshold 1 – Coordinate Ymax
2000	Threshold 2 – Pass X
2001	Threshold 2 – Pass Y
2002	Threshold 2 – Abs. minimum X
2003	Threshold 2 – Abs. minimum Y
2004	Threshold 2 – Abs. maximum X
2005	Threshold 2 – Abs. maximum Y
2006	Threshold 2 – Loc. minimum X

Number	ID of operant
2007	Threshold 2 – Loc. minimum Y
2008	Threshold 2 – Loc. maximum X
2009	Threshold 2 – Loc. maximum Y
2010	Threshold 2 – Bend X
2011	Threshold 2 – Bend Y
2012	Threshold 2 – Mean value Y
2013	Threshold 2 – Gradient
2014	Threshold 2 – Area
2015	Threshold 2 – Coordinate X value
2016	Threshold 2 – Coordinate Ymin
2017	Threshold 2 – Coordinate Ymax
2100	Threshold 3 – Pass X
2101	Threshold 3 – Pass Y
2102	Threshold 3 – Abs. minimum X
2103	Threshold 3 – Abs. minimum Y
2104	Threshold 3 – Abs. maximum X
2105	Threshold 3 – Abs. maximum Y
2106	Threshold 3 – Loc. minimum X
2107	Threshold 3 – Loc. minimum Y
2108	Threshold 3 – Loc. maximum X
2109	Threshold 3 – Loc. maximum Y
2110	Threshold 3 – Bend X
2111	Threshold 3 – Bend Y
2112	Threshold 3 – Mean value Y
2113	Threshold 3 – Gradient
2114	Threshold 3 – Area
2115	Threshold 3 – Coordinate X value
2116	Threshold 3 – Coordinate Ymin

Number	ID of operant
2117	Threshold 3 – Coordinate Ymax
2200	Threshold 4 – Pass X
2201	Threshold 4 – Pass Y
2202	Threshold 4 – Abs. minimum X
2203	Threshold 4 – Abs. minimum Y
2204	Threshold 4 – Abs. maximum X
2205	Threshold 4 – Abs. maximum Y
2206	Threshold 4 – Loc. minimum X
2207	Threshold 4 – Loc. minimum Y
2208	Threshold 4 – Loc. maximum X
2209	Threshold 4 – Loc. maximum Y
2210	Threshold 4 – Bend X
2211	Threshold 4 – Bend Y
2212	Threshold 4 – Mean value Y
2213	Threshold 4 – Gradient
2214	Threshold 4 – Area
2215	Threshold 4 – Coordinate X value
2216	Threshold 4 – Coordinate Ymin
2217	Threshold 4 – Coordinate Ymax
2300	Envelope 1 – Entry X
2301	Envelope 1 – Entry Y
2302	Envelope 1 – Exit X
2303	Envelope 1 – Exit Y
2304	Envelope 1 – Coordinate Start X
2305	Envelope 1 – Coordinate End X
2400	Envelope 2 – Entry X

Number	ID of operant
2401	Envelope 2 – Entry Y
2402	Envelope 2 – Exit X
2403	Envelope 2 – Exit Y
2404	Envelope 2 – Coordinate Start X
2405	Envelope 2 – Coordinate End X

10.2 Error codes

Error number	Description
0x00000000	PNIO_S_OK No error, write/read successful
0xDE80A000	READ_APPL_ERROR Data could not be read from the device.
0xDE80B000	READ_ACCESS_INVALIDINDEX This index is not specified
0xDE80B200	READ_ACCESS_INVALIDSLOT_SUBSLOT Reading from this slot is not supported **Note**: Only subslot 1 is supported
0xDE80B600	PNIO_E_IOD_READ_ACCESS_DENIED Read from this Slot/Subslot/Index not allowed
0xDE80C000	READ_RESOURCE_CONSTRAINCONFLICT The requested length is to small (< 2 Bytes)
0xDF80A100	WRITE_APPL_ERROR Data could not be written to the device. Please check your data and data length here.
0xDF80B000	WRITE_ACCESS_INVALIDINDEX This index is not specified
0xDF80B100	WRITE_ACCESS_INVALIDLENGTH Please check the length of the date which can be accepted by the DIGIFORCE 9307
0xDF80B200	WRITE_ACCESS_INVALIDSLOT_SUBSLOT Reading from this slot/subslot is not supported **Note**: Only subslot 1 is supported
0xDF80B600	WRITE_ACCESS_DENIED Write to this Slot/Subslot/Index not allowed
0xDF80C100	WRITE_RESOURCE_CONSTRAINCONFLICT The length of the data to write is to small (< 2 Bytes)