OPERATION MANUAL

DIGIFORCE® 9307
EtherNet/IP Manual

Manufacturer:
burster
präzisionsmesstechnik gmbh & co kg
Talstraße 1 - 5
D-76593 Gernsbach
Germany

Postfach 1432
D-76593 Gernsbach
Germany

Tel.: (+49) 07224 645-0
Fax.: (+49) 07224 645-88
E-Mail:info@burster.com
www.burster.com

Valid from: **04.04.2016**
Applies to: **DIGIFORCE® 9307 V0X04**

2118-BA9307EIEN-5170-041520

Exclusion of warranty liability for operating manuals

All information in the present documentation was prepared and compiled with great care and reproduced subject to effective control measures. No warranty is provided for freedom from errors. We reserve the right to make technical changes. The present information as well as the corresponding technical data can change without notice. Reproduction of any part of this documentation or its processing or revision using electronic systems is prohibited without the manufacturer's prior written approval.

Components, devices and measured value sensors made by burster praezisionsmesstechnik (hereinafter referred to as "product") are the results of targeted development and meticulous research. As of the date of delivery, burster provides a warranty for the proper condition and functioning of these products covering material and production defects for the period specified in the warranty document accompanying the product. However, burster excludes guarantee or warranty obligations as well as any liability beyond that for consequential damages caused by improper use of the product, in particular the implied warranty of success in the market as well as the suitability of the product for a particular purpose. Furthermore, burster assumes no liability for direct, indirect or incidental damages as well as consequential or other damages arising from the provision and use of the present documentation.

Declaration of Conformity to the EtherNet/IP™ Specification

ODVA hereby issues this Declaration of Conformity to *The EtherNet/IP™ Specification* for the product(s) described below. The Vendor listed below (the "Vendor") holds a valid Terms of Usage Agreement, which is incorporated herein by reference, for the EtherNet/IP Technology from ODVA, thereby agreeing that it is the Vendor's ultimate responsibility to assure that its EtherNet/IP Compliant Products conform to *The EtherNet/IP Specification* and that *The EtherNet/IP Specification* is provided by ODVA to the Vendor on an AS IS basis without warranty. NO WARRANTIES, EXPRESSED OR IMPLIED, INCLUDING WITHOUT LIMITATION ANY WARRANTIES OF MERCHANTABILITY OR FITNESS FOR A PARTICULAR PURPOSE, ARE BEING PROVIDED BY ODVA.

In recognition of the below EtherNet/IP Compliant Product(s) having been EtherNet/IP Conformance Tested at ODVA-authorized Test Service Provider and having received a passing result from ODVA at the Composite Test Revision Level specified below, this Declaration of Conformity authorizes the Vendor to use the EtherNet/IP Certification Marks in conjunction with the specific EtherNet/IP Compliant Product(s) described below, for so long as the Vendor's Terms of Usage Agreement for the EtherNet/IP Technology remains valid.

ODVA CONFORMANT

Certification Logo Mark

ODVA CONFORMANT ™

Certification Word Mark

This Declaration of Conformity is issued on March 3, 2016 on behalf of ODVA by:

Katherine Voss

Katherine Voss

Executive Director

Vendor Information	
Vendor Name	burster gmbh & co kg

Test Information	
Test Date	February 5, 2015
Composite Test Revision	CT11
ODVA File Number	11365.01

Product Information	**Network Category: Node**
Identity Object Instance	
Vendor ID (Attribute 1)	1381
Device Type (Attribute 2)	0x2B
Device Profile Name	Generic Device (keyable)

Products Covered under this Declaration of Conformity (Identity Object Instance)

No.	Product Code (Attribute 3)	Product Name (Attribute 7)	Product Revision (Attribute 4)	SOC File Name
1	1	DIGIFORCE-9307-V0304	14.001	digiforce9307.stc

Advisory Tests

ODVA File Number	Advisory Test	Test Date	Test Revision
N/A	EtherNet/IP Interoperability	Dec. 8-10, 2015	6

Table of contents

1 Introduction ... 8

1.1 General safety instructions ... 8

1.2 Intended use ... 9

2 Technical data ... 10

2.1 Supported EtherNet/IP-Services ... 10

2.2 Model 9307 device data ... 10

2.3 Electrical safety ... 10

2.4 Electromagnetic compatibility ... 11

2.4.1 Interference immunity ... 11

2.4.2 Emitted interference ... 11

2.5 Notes on CE labeling ... 11

3 Installation ... 12

3.1 Connection of fieldbus lines ... 12

3.2 Meaning of LEDs states ... 12

3.3 Configuration menu in DIGIFORCE® 9307 ... 13

4 EtherNet/IP ... 15

4.1 General information on EtherNet/IP data transfer ... 15

4.2 EDS file ... 16

4.3 Data conversion ... 17

4.3.1 Description of the data formats in this manual ... 17

4.3.2 Handling problems that arise when reading floating-point numbers ... 17

5 EtherNet/IP data protocol (real-time data) ... 18

5.1 Meaning of the content of the cyclic data packet from device to the controller ... 18

5.2 PLC inputs – Transfer from controller to device ... 19

5.2.1 PLC inputs byte 1 (controller to device) ... 19

5.2.2 PLC inputs byte 2 (controller to device) ... 19

5.2.3 PLC inputs byte 3 (controller to device) ... 20

5.2.4 PLC inputs byte 4 (controller to device) ... 20

5.3 PLC outputs – Transfer from device to controller ... 21

5.3.1 PLC outputs byte 1 ... 21

5.3.2 PLC outputs byte 2 (9307 adjustable outputs) ... 21

5.3.3 PLC outputs byte 3 (9307 adjustable outputs) ... 22

5.3.4 PLC outputs byte 4 (9307 adjustable outputs) ... 22

5.3.5 Default assignment of output byte [4..2] adjustable outputs ... 23

5.4 Evaluation info – Transfer from device to controller ... 24

5.4.1 Evaluation info byte 1 ... 24

5.4.2 Evaluation info byte 2 ... 24

5.4.3 Evaluation info byte 3 ... 25

5.4.4 Evaluation info byte 4 25
5.5 Byte reference list 26
6 Unconnected Explicit Messaging (Acyclic services)....32
6.1 Instrument configuration....32
6.1.1 General settings (Class 768) 32
6.1.2 Communication: Change menu, display update, fault indication (Class 770) 42
6.1.3 Minimal setup menu (Class 771) 43
6.1.4 General channel settings (Class 772) 44
6.1.5 Channel settings “Potentiometer” (Class 773)....48
6.1.6 Channel settings “Standard signal” (Class 774) 48
6.1.7 Channel settings “Strain gauge” (Class 775)....49
6.1.8 Channel settings “Resistance” (Class 776) 50
6.1.9 Channel settings “Piezo” (Class 777) 50
6.1.10 Channel settings “Incremental” (Class 778) 51
6.1.11 Channel settings “SSI” (Class 779) 54
6.1.12 Channel settings “EnDat” (Class 780) 59
6.1.13 Tare (Class 781) 69
6.1.14 Measurement mode (Class 782) 70
6.1.15 Evaluation window 1 (Class 783) 72
6.1.16 Evaluation window 2 (Class 784) 75
6.1.17 Evaluation window 3 (Class 785) 76
6.1.18 Evaluation window 4 (Class 786) 76
6.1.19 Evaluation window 5 (Class 787) 76
6.1.20 Evaluation window 6 (Class 788) 76
6.1.21 Evaluation window 7 (Class 789) 76
6.1.22 Evaluation window 8 (Class 790) 77
6.1.23 Evaluation window 9 (Class 791) 77
6.1.24 Evaluation window 10 (Class 792) 77
6.1.25 Evaluation trapezoid window X1 (Class 793) 77
6.1.26 Evaluation trapezoid window X2 (Class 794) 79
6.1.27 Evaluation trapezoid window Y1 (Class 795) 79
6.1.28 Evaluation trapezoid window Y2 (Class 796) 81
6.1.29 Evaluation threshold 1 (Class 797)....82
6.1.30 Evaluation threshold 2 (Class 798)....84
6.1.31 Evaluation threshold 3 (Class 799)....85
6.1.32 Evaluation threshold 4 (Class 800)....85
6.1.33 Evaluation envelope 1 (Class 801 to 805)....85
6.1.34 Evaluation envelope 2 (Class 806 to 810)....85
6.1.35 Evaluation rotary switch 1 (Class 811) 85
6.1.36 Evaluation rotary switch 2 (Class 812) 85
6.1.37 Evaluation mathematical functions (Class 813)....85

6.1.38 Tolerance band for evaluation elements (Class 814) 98
6.1.39 Realtime switchpoints S1 (Class 815) 98
6.1.40 Realtime switchpoints S2 (Class 816) 99
6.1.41 Realtime switchpoints S3 (Class 817) 99
6.1.42 Realtime switchpoints S4 (Class 818) 100
6.1.43 Sensortest (Class 819) 100
6.1.44 Setup user-defined values (Class 820) 101
6.1.45 Copy/initialize measurement programs (Class 821) 103
6.1.46 Reference curve Y1, Y2 (Class 822 to 826) 104
6.1.47 Test operation (Class 827) 104
6.1.48 Zoom and autoscale (Class 828) 104
6.2 Measurement results 106
6.2.1 Status of measurement 106
6.2.2 Further information for current measurement curve 107
6.2.3 Further information for current pretrigger curve 108
6.2.4 General curve data channel Y1 108
6.2.5 General curve data channel Y2 109
6.2.6 Request measurement results of user-defined values 109
6.2.7 Statistic measurement result evaluation element window 1 (EvElem 1) 117
6.2.8 Statistic measurement result evaluation element window 2 (EvElem 2) 117
6.2.9 Statistic measurement result evaluation element window 3 (EvElem 3) 117
6.2.10 Statistic measurement result evaluation element window 4 (EvElem 4) 117
6.2.11 Statistic measurement result evaluation element window 5 (EvElem 5) 117
6.2.12 Statistic measurement result evaluation element window 6 (EvElem 6) 117
6.2.13 Statistic measurement result evaluation element window 7 (EvElem 7) 117
6.2.14 Statistic measurement result evaluation element window 8 (EvElem 8) 117
6.2.15 Statistic measurement result evaluation element window 9 (EvElem 9) 117
6.2.16 Statistic measurement result evaluation element window 10 (EvElem 10) 117
6.2.17 Statistic measurement result evaluation element threshold 1 (EvElem 11) 118
6.2.18 Statistic measurement result evaluation element threshold 2 (EvElem 12) 118
6.2.19 Statistic measurement result evaluation element threshold 3 (EvElem 13) 118
6.2.20 Statistic measurement result evaluation element threshold 4 (EvElem 14) 118
6.2.21 Statistic measurement result evaluation element trapezoid window X1 (EvElem 15) 118
6.2.22 Statistic measurement result evaluation element trapezoid window X2 (EvElem 16) 118
6.2.23 Statistic measurement result evaluation element trapezoid window Y1 (EvElem 17) 118
6.2.24 Statistic measurement result evaluation element trapezoid window Y2 (EvElem 18) 118
6.2.25 Statistic measurement result evaluation element envelope 1 (EvElem 19) 118
6.2.26 Statistic measurement result evaluation element envelope 2 (EvElem 20) 118
6.2.27 Statistic measurement result evaluation element mathematical calculation 1 (EvElem 21) 118
6.2.28 Statistic measurement result evaluation element mathematical calculation 2 (EvElem 22) 118

6.2.29 Statistic measurement result evaluation element mathematical calculation 3 (EvElem 23) ... 119
6.2.30 Statistic measurement result evaluation element mathematical calculation 4 (EvElem 24) ... 119
6.2.31 Statistic measurement result evaluation element mathematical calculation 5 (EvElem 25) ... 119
6.2.32 Statistic measurement result evaluation element mathematical calculation 6 (EvElem 26) ... 119
6.2.33 Read-out X-coordinates of current measurement curve ... 120
6.2.34 Read-out Y1-coordinates of current measurement curve ... 121
6.2.35 Read-out Y2-coordinates of current measurement curve ... 121
6.2.36 Read-out X-coordinates of current pretrigger curve ... 122
6.2.37 Read-out Y1-coordinates of current pretrigger curve ... 123
6.2.38 Read-out Y2-coordinates of current pretrigger curve ... 123
6.2.39 Evaluation results window 1 ... 123
6.2.40 Evaluation results window 2 ... 125
6.2.41 Evaluation results window 3 ... 125
6.2.42 Evaluation results window 4 ... 125
6.2.43 Evaluation results window 5 ... 125
6.2.44 Evaluation results window 6 ... 125
6.2.45 Evaluation results window 7 ... 126
6.2.46 Evaluation results window 8 ... 126
6.2.47 Evaluation results window 9 ... 126
6.2.48 Evaluation results window 10 ... 126
6.2.49 Evaluation results threshold 1 ... 126
6.2.50 Evaluation results threshold 2 ... 128
6.2.51 Evaluation results threshold 3 ... 128
6.2.52 Evaluation results threshold 4 ... 128
6.2.53 Evaluation results trapezoid window X1 ... 129
6.2.54 Evaluation results trapezoid window X2 ... 129
6.2.55 Evaluation results trapezoid window Y1 ... 129
6.2.56 Evaluation results trapezoid window Y2 ... 130
6.2.57 Evaluation results envelope 1 ... 130
6.2.58 Evaluation results envelope 2 ... 130
6.2.59 Evaluation results rotary switch evaluation element 1 ... 131
6.2.60 Evaluation results rotary switch evaluation element 2 ... 144
6.2.61 Evaluation results mathematical functions ... 144
6.2.62 Combined results (common curve data and evalution elements) ... 146

7 Appendix ... 149

7.1 Operand table for mathematical functions ... 149
7.2 Error codes ... 164

1 Introduction

1.1 General safety instructions

⚠	**Warning concerning installation of the device and software** • Installation of the device and the interface must be carried out by qualified personnel only. Qualified personnel meets the following requirements: – You are familiar with the safety designs used in automation engineering, and understand how to deal with them in your capacity as configuration engineer. – You are an operator of automation systems and have been instructed in how to handle the system. You are familiar with the operation of the equipment described in this documentation. – You are a commissioning or service engineer and have successfully completed a training course qualifying you to repair automation systems. In addition you are authorized to commission, ground and label circuits and equipment in accordance with safety engineering standards. • Always observe the current safety and accident prevention regulations when commissioning the equipment. • Install automation engineering equipment and installations with sufficient protection against accidental actuation.
⚠	**Warning concerning use of the device** • Take suitable precautions in both the hardware and software to prevent any undefined states of the automation installation in the event of an open circuit. • In installations where major damage to property or even personal injury may be caused by a malfunction, take suitable precautions to establish a safe operating state in the event of a fault. This may be achieved using limit switches, mechanical interlocks etc. for example. • Do not make unauthorized modifications to the device or to the EtherNet/IP interface.
!	**Notice** • Install the power, signal and sensor cables so as to prevent electromagnetic interference from impairing operation of the equipment. • Proper transportation, storage, installation and assembly plus careful operation and maintenance are essential for trouble-free and safe operation of the equipment. • Have non-functional instruments inspected by the manufacturer.

1.2 Intended use

The DIGIFORCE® 9307 is an instrument for monitoring repetitive production processes. Its core function is to record and analyze signals from processes in which physical variables, such as force, pressure or torque, vary as a function of displacement, angle or time according to a defined curve. The resultant measurement curve is analyzed using graphical evaluation elements such as windows, envelopes and thresholds. The result of the analysis is classified as "OK" or "NOT OK" (NOK) and can be retrieved from various interfaces.

The instrument is not a substitute for a safety device; for instance it cannot be used as an emergency stop device in a press for when the pressure exceeds a set limit.

2 Technical data

2.1 Supported EtherNet/IP-Services

- Implicit Messaging
- Explicit Messaging
- Vendor Specific Services (used for Device Configuration)
- Address Conflict Detection (ACD)
- Device Level Ring (DLR)

Identity Object of a sample device

Vendor ID	0x565 (1381)
Device Type	0x2B (43)
Product Code	0x01 (1)
Major Revision	0x0E (14)
Minor Revision	0x01 (1)
Summary Status	0x30 (48)
Serial Number	34526987
Product Name	DIGIFORCE 9307-V0304
Present State	0x00 (0)

You will find further information about EtherNet/IP at: www.odva.org.

2.2 Model 9307 device data

Bus connector	RJ45
EDS file	BURSTER-DIGIFORCE-9307-V0304.EDS

2.3 Electrical safety

Reverse voltage protection	Yes
Air clearance/leakage paths	To DIN EN 61010-1
Electrical isolation	Between fieldbus and internal electronics
Withstand voltage	DC 500 V

2.4 Electromagnetic compatibility

2.4.1 Interference immunity

Interference immunity to EN 61326-1:2006

Industrial locations

2.4.2 Emitted interference

Emitted interference to EN 61326-1:2006

Class A

EN 61000-3-2:2000

EN 61000-3-3:1995+A1:2001

2.5 Notes on CE labeling

burster equipment carrying the CE mark meets the requirements of the EU directives and the harmonized European standards (EN) cited therein.

The EU declarations of conformity are available to the relevant authorities as specified in the directives. A copy of the declaration of conformity is included in the relevant equipment documentation.

3 Installation

Please note that you can download various documents such as installation guidelines and specifications about EtherNet/IP at ODVA: www.odva.org.

3.1 Connection of fieldbus lines

burster devices with a EtherNet/IP option have two **RJ 45** connectors for the fieldbus connection.

3.2 Meaning of LEDs states

LED		Blinking	On
ACT		Data transmission	x
LNK / LA		x	Ethernet line monitoring
MOD	**Off**	x	No power
	Green	Standby	Device operational
	Red	Minor fault Incorrect or inconsistent configuration	Major fault A non-recoverable fault
	Green/Red	Self-test	x
NET	**Off**	**x**	Not powered, no IP-Addr.
	Green	**No connections**	Device connected
	Red	**Connection timeout**	Duplicated IP
	Green/Red	**Self-test**	x
BF		x	x
BOOT		Device in boot mode	x
US1		x	Supply voltage

3.3 Configuration menu in DIGIFORCE® 9307

To access the menu

Start in measurement mode. After power on the measurement mode is always set. The display will look differently dependent on your settings or your last measurements.

You can go to "Main setup menu" in measurement mode by pressing the **[F5]** key twice.

This is how it works

1. In measurement mode, press the **[F5]** key twice.

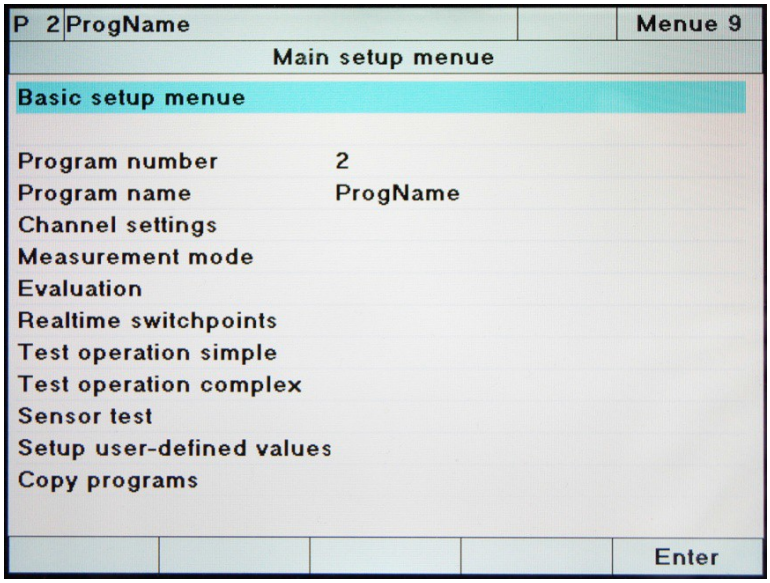

2. Press **[Enter]** to open the "Basic setup menu".

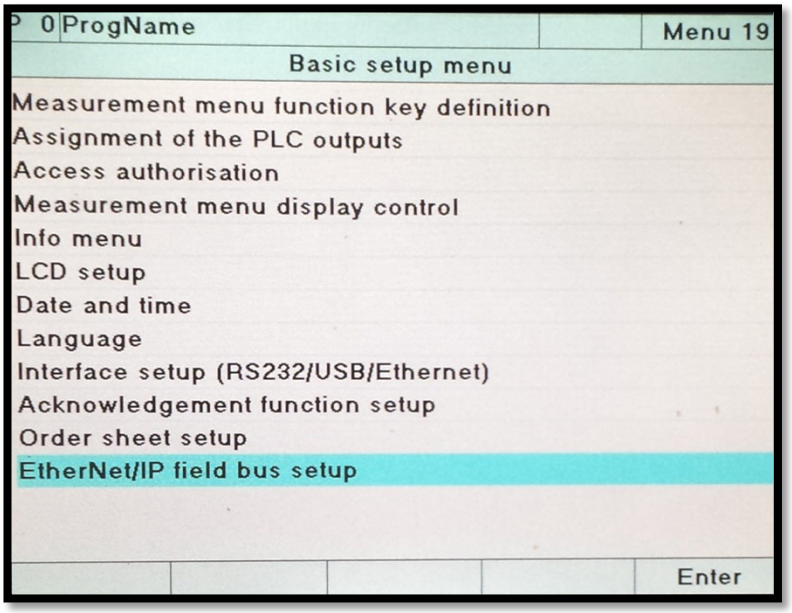

3. Select "EtherNet/IP field bus setup" menu with ▼ or ▲ and press **[Enter]**.

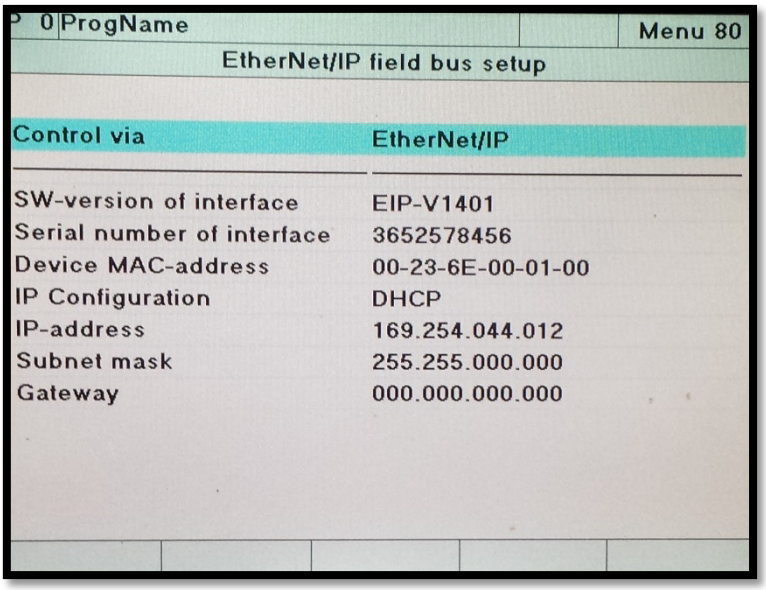

Parameters

Control via	**EtherNet/IP**: DIGIFORCE® 9307 responds solely to control signals (inputs) on the EtherNet/IP interface **PLC:** DIGIFORCE® 9307 responds solely to control signals (inputs) on the PLC I/O interface. When controlled via PLC I/O, data is still transferred in the cyclical EtherNet/IP protocol
SW-Version of Interface	Version of the field bus card software
Serial number of interface	The serial number of the field bus card
Device MAC-address	Address to identify the field bus card inside of EtherNet/IP Network
IP Configuration	Network Configuration Type (BOOTP, DHCP, Static) Note: This parameter cannot be changed in device menü
IP-address	IP-Address Note: If DHCP is activated, IP will be assigned by a DHCP server. The IP cannot be changed in device menu if DHCP/BOOTP is activated
Subnet mask	Subnet mask assigned by the Controller or a Configuration tool Note: If DHCP is activated, the subnet mask will be assigned by a DHCP Server The subnet mask address cannot be changed in device menu if DHCP/BOOTP is activated
Gateway	Gateway assigned by the Controller or a Configuration tool Note: If DHCP is activated, Gateway will be assigned by a DHCP server The Gateway address cannot be changed in device menu if DHCP/BOOTP is activated

4 EtherNet/IP

4.1 General information on EtherNet/IP data transfer

For EtherNet/IP (implicit messaging) one must define at the configuration stage how many bytes are transferred between Controller (Scanner) and Device (Adapter) during each cyclic access.

The device is controlled using the data transferred from Controller (Scanner) to Device (Adapter). This data always consists of four bytes for the DIGIFORCE® 9307 unit. The function of these four bytes is explained in chapter *0*

PLC inputs – Transfer from controller to device.

The DIGIFORCE® 9307 sends cyclic 140 bytes to controller. This packet contains PLC status, evaluation information and 30 measurement values which are user selectable within the 9307 configuration and the live values of max. 3 active measurement channels.

4.2 EDS file

DIGIFORCE® equipment with the EtherNet/IP option is supplied with a CD. This disk includes the **E**lectonic **D**ata **S**heet (EDS) file *BURSTER-DIGIFORCE-9307-V0304.EDS*. This EDS file contains the EtnerNet/IP configuration information for the DIGIFORCE 9307®.

The structure, contents and encoding of this device description data is standardized so that any EtherNet/IP devices can be configured using configuration tools from various manufacturers.

The EDS file does not specify what data is transferred or how this data should be interpreted. The user must glean this information from the operating manual and program his Controller accordingly.

4.3 Data conversion

4.3.1 Description of the data formats in this manual

The terms PLC inputs and PLC outputs refer to the DIGIFORCE® 9307 unit. These terms are reversed when referred to the Controller.

The function of the PLC-In / PLC-Out bits is identical to the parallel PLC I/O ports on the unit itself and can be found within the DIGIFORCE® 9307 operating manual.

The floating-point numbers ("float") mentioned are four bytes long (32 bits) and are based on the IEEE-754 standard.

Numbers that are not specifically labeled or are labeled with "d" or "dec" are decimal numbers. (Example: 1234, 1234dec, dec1234, 1234d)

Numbers that are labeled with "0x" or "hex" are hexadecimal numbers. (Example: 0x1234, hex1234, 1234hex, 1234h)

Numbers that are labeled with "b" or "bin" are binary numbers. (Example: b1100, bin1100, 1100b, 1100bin).

4.3.2 Handling problems that arise when reading floating-point numbers

This only concerns cases in which floating-point numbers need to be read from the DIGIFORCE 9307 unit.

Floating-point numbers (data type REAL), according to IEEE 754, are encoded as four bytes for transfer. This may create problems depending on the type of PLC used.

Cause

In the DIGIFORCE® 9307-EtherNet/IP, the sign byte is transferred first. Some PLCs expect this byte in the highest of the four addresses not in the lowest address. This inevitably leads to misinterpretation of the numeric value. In this case the order of the four bytes has to be changed by the PLC as shown in the figure.

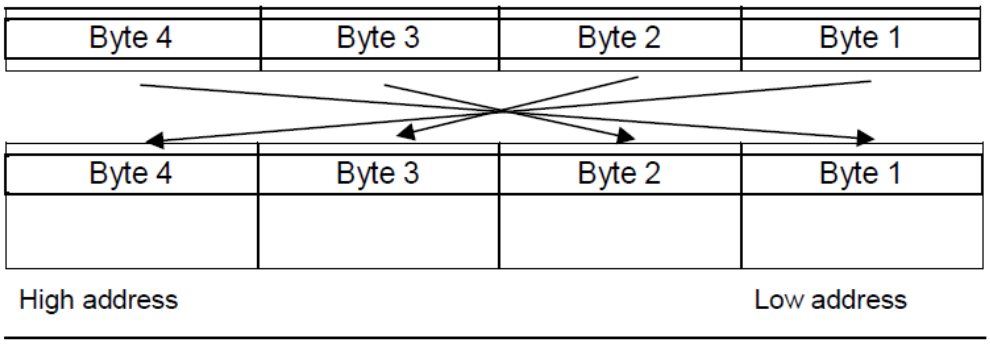

Diagram 1: Exchange of the order of bytes caused by misinterpretation of the numeric value

5 EtherNet/IP data protocol (real-time data)

5.1 Meaning of the content of the cyclic data packet from device to the controller

Overview of the packet content:

Content	Length/Bytes	Bytes
PLC output status	4	Σ 140 bytes
Evaluation info	4	
12 evaluation values (float) , selectable list M5-1*	12x4	
12 evaluation values (float) , selectable list M5-2*	12x4	
6 evaluation values (float), selectable list curve*	6x4	
3 life values (X, Y1, Y2) *[1]	3x4	

* The selectable list contains values which are defined within the DIGIFORCE® 9307 device. The following values are available:

- General curve data Y1
- General curve data Y2
- Evaluation results of mathematical functions
- Evaluation results of each evaluation element (e.g. window entry/exit window extended evaluation results like Min/Max window limits Xmin, Xmax, Ymin, Ymax threshold crossing point.)

*[1] The live values of the sensor channels are updated at a rate of 100 Hz. The values are only updated when the DIGIFORCE® 9307 is ready to record measurements or is actively taking a measurement.

How to define the selectable list: The parameterization of the selectable lists is done in the main setup menu "Setup user defined values" (Note that this setting is specific for each measurement program. For details refer to the DIGIFORCE® 9307 operation manual, section 5.13 User defined values.)

5.2 PLC inputs – Transfer from controller to device

Four bytes of PLC-In data for the DIGIFORCE® 9307 are always transferred from the EtherNet/IP Controller (Scanner) to the DIGIFORCE® 9307. These bits have the same function as the parallel PLC inputs to the DIGIFORCE® 9307 unit. (See detailed documentation of these signals within the DIGIFORCE® 9307 operation manual, section 5.3.9 Assigning PLC outputs).

5.2.1 PLC inputs byte 1 (controller to device)

PLC inputs Byte 1 (Controller → Device)		
Valid values:	IN_PROG0	Bit 0 LSB
	IN_PROG1	Bit 1
Set reserved bits to '0'	IN_PROG2	Bit 2
	IN_PROG3	Bit 3
	IN_PROG4	Bit 4
	reserved	Bit 5
	reserved	Bit 6
	reserved	Bit 7 MSB

5.2.2 PLC inputs byte 2 (controller to device)

PLC inputs Byte 2 (Controller → Device)		
Valid values:	IN_STROBE	Bit 0 LSB
	IN_ACK_OK	Bit 1
Set reserved bits to '0'	IN_ACK_NOK	Bit 2
	IN_TEST_OP	Bit 3
	IN_TEST_OPC	Bit 4
	IN_AUTO	Bit 5
	reserved	Bit 6
	IN_REF_MEAS	Bit 7 MSB

5.2.3 PLC inputs byte 3 (controller to device)

PLC inputs Byte 3 (Controller → Device)		
Valid values:	IN_RESET	Bit 0 LSB
	IN_PROG6*	Bit 1
Set reserved bits to '0'	IN_STEST	Bit 2
	IN_PROG5*	Bit 3
	reserved	Bit 4
	IN_TAREX	Bit 5
	IN_TAREY1	Bit 6
	IN_TAREY2	Bit 7 MSB

* IN_PROG[6..5] necessary with 9307 firmware for 128 measurement programs. If not used set this bits to "0".

5.2.4 PLC inputs byte 4 (controller to device)

PLC inputs Byte 4 (Controller → Device)		
Valid values:	IN_START	Bit 0 LSB
	reserved	Bit 1
Set reserved bits to '0'	reserved	Bit 2
	reserved	Bit 3
	reserved	Bit 4
	reserved	Bit 5
	reserved	Bit 6
	reserved	Bit 7 MSB

5.3 PLC outputs – Transfer from device to controller

The data refers to the PLC output of the DIGIFORCE® 9307. The data described here is the data transferred from the DIGIFORCE® 9307 to the EtherNet/IP controller.

The function of the PLC-In / PLC-Out bits is identical to the parallel PLC I/O ports on the unit itself and can be found within the DIGIFORCE® 9307 operation manual for the unit. Also the signal timing is available within the DIGIFORCE® 9307 operation manual.

5.3.1 PLC outputs byte 1

PLC outputs Byte 1 (Device → Controller)		
Valid values:	OUT_READY	Bit 0 LSB
	OUT_ERROR	Bit 1
	OUT_NOK_ONL1	Bit 2
	OUT_NOK_ONL2	Bit 3
	OUT_OK	Bit 4
	OUT_NOK	Bit 5
	OUT_S1	Bit 6
	OUT_S2	Bit 7 MSB

5.3.2 PLC outputs byte 2 (9307 adjustable outputs)

PLC outputs Byte 2 (Device → Controller)		
Valid values:	PLC_OUT8	Bit 0 LSB
	PLC_OUT7	Bit 1
	PLC_OUT6	Bit 2
	PLC_OUT5	Bit 3
	PLC_OUT4	Bit 4
	PLC_OUT3	Bit 5
	PLC_OUT2	Bit 6
	PLC_OUT1	Bit 7 MSB

5.3.3 PLC outputs byte 3 (9307 adjustable outputs)

PLC outputs Byte 3 (Device → Controller)		
Valid values:	PLC_OUT9	Bit 0 LSB
	PLC_OUT10	Bit 1
	PLC_OUT11	Bit 2
	PLC_OUT12	Bit 3
	PLC_OUT13	Bit 4
	PLC_OUT14	Bit 5
	PLC_OUT15	Bit 6
	PLC_OUT16	Bit 7 MSB

5.3.4 PLC outputs byte 4 (9307 adjustable outputs)

PLC outputs Byte 4 (Device → Controller)		
Valid values:	reserved	Bit 0 LSB
	PLC_OUT23	Bit 1
	PLC_OUT22	Bit 2
	PLC_OUT21	Bit 3
	PLC_OUT20	Bit 4
	PLC_OUT19	Bit 5
	PLC_OUT18	Bit 6
	PLC_OUT17	Bit 7 MSB

NOTE	Note that PLC outputs PLC_OUT[23..1] could be assigned with different functions. The assignment could be changed within the DIGIFORCE® 9307 basic setup menu "Assignment of the PLC outputs"(see DIGIFORCE® 9307 operation manual chapter 5.3.9 Assigning PLC outputs).

5.3.5 Default assignment of output byte [4..2] adjustable outputs

9307 adjustable PLC outputs default assignment		
	PLC_OUT1	OUT_STROBE
	PLC_OUT2	OUT_OK_SENSORTEST
	PLC_OUT3	OUT_NOK_WINDOW_9
	PLC_OUT4	OUT_PROG0
	PLC_OUT5	OUT_PROG1
	PLC_OUT6	OUT_PROG2
	PLC_OUT7	OUT_PROG3
	PLC_OUT8	OUT_PROG4
	PLC_OUT9	OUT_S3
	PLC_OUT10	OUT_S4
	PLC_OUT11	OUT_NOK_WINDOW_8
	PLC_OUT12	OUT_NOK_WINDOW_7
	PLC_OUT13	OUT_NOK_WINDOW_6
	PLC_OUT14	OUT_NOK_WINDOW_5
	PLC_OUT15	OUT_NOK_WINDOW_4
	PLC_OUT16	OUT_NOK_WINDOW_3
	PLC_OUT17	OUT_NOK_WINDOW_2
	PLC_OUT18	OUT_NOK_WINDOW_1
	PLC_OUT19	OUT_WARNING_TARE
	PLC_OUT20	OUT_WARNING_TOOLCOUNT
	PLC_OUT21	OUT_WARNING_TOTAL
	PLC_OUT22	OUT_TEST_OP_SIMPLE
	PLC_OUT23	OUT_TEST_OP_COMPLEX

5.4 Evaluation info – Transfer from device to controller

The evaluation info (4 byte) contains the evaluation result of each element.

5.4.1 Evaluation info byte 1

Evaluation info byte 1 (Device → Controller)		
Valid values:	Window_1_NOK	Bit 0 LSB
	Window_2_NOK	Bit 1
	Window_3_NOK	Bit 2
	Window_4_NOK	Bit 3
	Window_5_NOK	Bit 4
	Window_6_NOK	Bit 5
	Window_7_NOK	Bit 6
	Window_8_NOK	Bit 7 MSB

5.4.2 Evaluation info byte 2

Evaluation info byte 2 (Device → Controller)		
Valid values:	Window_9_NOK	Bit 0 LSB
	Window_10_NOK	Bit 1
	Trapezoid_X1_NOK	Bit 2
	Trapezoid_X2_NOK	Bit 3
	Trapezoid_Y1_NOK	Bit 4
	Trapezoid_Y2_NOK	Bit 5
	Threshold_1_NOK	Bit 6
	Threshold _2_NOK	Bit 7 MSB

5.4.3 Evaluation info byte 3

Evaluation info byte 3 (Device → Controller)		
Valid values:	Threshold_3_NOK	Bit 0 LSB
	Threshold_4_NOK	Bit 1
	Envelope_1_NOK	Bit 2
	Envelope_2_NOK	Bit 3
	Math_Evaluation_1_NOK	Bit 4
	Math_Evaluation_2_NOK	Bit 5
	Math_Evaluation_3_NOK	Bit 6
	Math_Evaluation_4_NOK	Bit 7 MSB

5.4.4 Evaluation info byte 4

Evaluation info byte 4 (Device → Controller)		
Valid values:	Math_Evaluation_5_NOK	Bit 0 LSB
	Math_Evaluation_6_NOK	Bit 1
	Rotary_Switch_1_NOK	Bit 2
	Rotary_Switch_2_NOK	Bit 3
	MeasChannel_Overload	Bit 4
	Curve_Y1_NOK	Bit 5
	Curve_Y2_NOK	Bit 6
	Global_NOK	Bit 7 MSB

5.5 Byte reference list

Data from controller to device

Byte	Function	Section	Comments
0	PLC inputs Byte 1	5.2.1	
1	PLC inputs Byte 2	5.2.2	
2	PLC inputs Byte 3	5.2.3	
3	PLC inputs Byte 4	5.2.4	

Data from device to controller

Byte	Function	Section	Comments
0	PLC outputs Byte 1	5.3.1	
1	PLC outputs Byte 2	5.3.2	
2	PLC outputs Byte 3	5.3.3	
3	PLC outputs Byte 4	5.3.4	
4	Evaluation info Byte 1	5.4.1	
5	Evaluation info Byte 2	5.4.2	
6	Evaluation info Byte 3	5.4.3	
7	Evaluation info Byte 4	5.4.4	
8	M5-1 value_1 (1st Byte)	see DIGIFORCE® 9307 operation manual chapter 5.13	User defined value in DIGIFORCE® 9307 List M5-1 (32-Bit float)
9	M5-1 value_1 (2nd Byte)	see above	
10	M5-1 value_1 (3rd Byte)	see above	
11	M5-1 value_1 (4th Byte)	see above	
12	M5-1 value_2 (1st Byte)	see above	User defined value in DIGIFORCE® 9307 List M5-1 (32-Bit float)
13	M5-1 value_2 (2nd Byte)	see above	
14	M5-1 value_2 (3rd Byte)	see above	
15	M5-1 value_2 (4th Byte)	see above	
16	M5-1 value_3 (1st Byte)	see above	User defined value in DIGIFORCE® 9307 List M5-1 (32-Bit float)
17	M5-1 value_3 (2nd Byte)	see above	
18	M5-1 value_3 (3rd Byte)	see above	
19	M5-1 value_3 (4th Byte)	see above	

Byte	Function	Section	Comments
20	M5-1 value_4 (1st Byte)	see above	User defined value in DIGIFORCE® 9307 List M5-1 (32-Bit float)
21	M5-1 value_4 (2nd Byte)	see above	
22	M5-1 value_4 (3rd Byte)	see above	
23	M5-1 value_4 (4th Byte)	see above	
24	M5-1 value_5 (1st Byte)	see above	User defined value in DIGIFORCE® 9307 List M5-1 (32-Bit float)
25	M5-1 value_5 (2nd Byte)	see above	
26	M5-1 value_5 (3rd Byte)	see above	
27	M5-1 value_5 (4th Byte)	see above	
28	M5-1 value_6 (1st Byte)	see above	User defined value in DIGIFORCE® 9307 List M5-1 (32-Bit float)
29	M5-1 value_6 (2nd Byte)	see above	
30	M5-1 value_6 (3rd Byte)	see above	
31	M5-1 value_6 (4th Byte)	see above	
32	M5-1 value_7 (1st Byte)	see above	User defined value in DIGIFORCE® 9307 List M5-1 (32-Bit float)
33	M5-1 value_7 (2nd Byte)	see above	
34	M5-1 value_7 (3rd Byte)	see above	
35	M5-1 value_7 (4th Byte)	see above	
36	M5-1 value_8 (1st Byte)	see above	User defined value in DIGIFORCE® 9307 List M5-1 (32-Bit float)
37	M5-1 value_8 (2nd Byte)	see above	
38	M5-1 value_8 (3rd Byte)	see above	
39	M5-1 value_8 (4th Byte)	see above	
40	M5-1 value_9 (1st Byte)	see above	User defined value in DIGIFORCE® 9307 List M5-1 (32-Bit float)
41	M5-1 value_9 (2nd Byte)	see above	
42	M5-1 value_9 (3rd Byte)	see above	
43	M5-1 value_9 (4th Byte)	see above	
44	M5-1 value_10 (1st Byte)	see above	User defined value in DIGIFORCE® 9307 List M5-1 (32-Bit float)
45	M5-1 value_10 (2nd Byte)	see above	
46	M5-1 value_10 (3rd Byte)	see above	
47	M5-1 value_10 (4th Byte)	see above	

Byte	Function	Section	Comments
48	M5-1 value_11 (1st Byte)	see above	User defined value in DIGIFORCE® 9307 List M5-1 (32-Bit float)
49	M5-1 value_11 (2nd Byte)	see above	
50	M5-1 value_11 (3rd Byte)	see above	
51	M5-1 value_11 (4th Byte)	see above	
52	M5-1 value_12 (1st Byte)	see above	User defined value in DIGIFORCE® 9307 List M5-1 (32-Bit float)
53	M5-1 value_12 (2nd Byte)	see above	
54	M5-1 value_12 (3rd Byte)	see above	
55	M5-1 value_12 (4th Byte)	see above	
56	M5-2 value_1 (1st Byte)	see above	User defined value in DIGIFORCE® 9307 List M5-2 (32-Bit float)
57	M5-2 value_1 (2nd Byte)	see above	
58	M5-2 value_1 (3rd Byte)	see above	
59	M5-2 value_1 (4th Byte)	see above	
60	M5-2 value_2 (1st Byte)	see above	User defined value in DIGIFORCE® 9307 List M5-2 (32-Bit float)
61	M5-2 value_2 (2nd Byte)	see above	
62	M5-2 value_2 (3rd Byte)	see above	
63	M5-2 value_2 (4th Byte)	see above	
64	M5-2 value_3 (1st Byte)	see above	User defined value in DIGIFORCE® 9307 List M5-2 (32-Bit float)
65	M5-2 value_3 (2nd Byte)	see above	
66	M5-2 value_3 (3rd Byte)	see above	
67	M5-2 value_3 (4th Byte)	see above	
68	M5-2 value_4 (1st Byte)	see above	User defined value in DIGIFORCE® 9307 List M5-2 (32-Bit float)
69	M5-2 value_4 (2nd Byte)	see above	
70	M5-2 value_4 (3rd Byte)	see above	
71	M5-2 value_4 (4th Byte)	see above	
72	M5-2 value_5 (1st Byte)	see above	User defined value in DIGIFORCE® 9307 List M5-2 (32-Bit float)
73	M5-2 value_5 (2nd Byte)	see above	
74	M5-2 value_5 (3rd Byte)	see above	
75	M5-2 value_5 (4th Byte)	see above	

Byte	Function	Section	Comments
76	M5-2 value_6 (1st Byte)	see above	User defined value in DIGIFORCE® 9307 List M5-2 (32-Bit float)
77	M5-2 value_6 (2nd Byte)	see above	
78	M5-2 value_6 (3rd Byte)	see above	
79	M5-2 value_6 (4th Byte)	see above	
80	M5-2 value_7 (1st Byte)	see above	User defined value in DIGIFORCE® 9307 List M5-2 (32-Bit float)
81	M5-2 value_7 (2nd Byte)	see above	
82	M5-2 value_7 (3rd Byte)	see above	
83	M5-2 value_7 (4th Byte)	see above	
84	M5-2 value_8 (1st Byte)	see above	User defined value in DIGIFORCE® 9307 List M5-2 (32-Bit float)
85	M5-2 value_8 (2nd Byte)	see above	
86	M5-2 value_8 (3rd Byte)	see above	
87	M5-2 value_8 (4th Byte)	see above	
88	M5-2 value_9 (1st Byte)	see above	User defined value in DIGIFORCE® 9307 List M5-2 (32-Bit float)
89	M5-2 value_9 (2nd Byte)	see above	
90	M5-2 value_9 (3rd Byte)	see above	
91	M5-2 value_9 (4th Byte)	see above	
92	M5-2 value_10 (1st Byte)	see above	User defined value in DIGIFORCE® 9307 List M5-2 (32-Bit float)
93	M5-2 value_10 (2nd Byte)	see above	
94	M5-2 value_10 (3rd Byte)	see above	
95	M5-2 value_10 (4th Byte)	see above	
96	M5-2 value_11 (1st Byte)	see above	User defined value in DIGIFORCE® 9307 List M5-2 (32-Bit float)
97	M5-2 value_11 (2nd Byte)	see above	
98	M5-2 value_11 (3rd Byte)	see above	
99	M5-2 value_11 (4th Byte)	see above	
100	M5-2 value_12 (1st Byte)	see above	User defined value in DIGIFORCE® 9307 List M5-2 (32-Bit float)
101	M5-2 value_12 (2nd Byte)	see above	
102	M5-2 value_12 (3rd Byte)	see above	
103	M5-2 value_12 (4th Byte)	see above	

Byte	Function	Section	Comments
104	M1_Curvevalue_1 (1st Byte)	see above	User defined value in DIGIFORCE® 9307 value in curve M1 (32-Bit float)
105	M1_Curvevalue_1 (2nd Byte)	see above	
106	M1_Curvevalue_1 (3rd Byte)	see above	
107	M1_Curvevalue_1 (4th Byte)	see above	
108	M1_Curvevalue_2 (1st Byte)	see above	User defined value in DIGIFORCE® 9307 value in curve M1 (32-Bit float)
109	M1_Curvevalue_2 (2nd Byte)	see above	
110	M1_Curvevalue_2 (3rd Byte)	see above	
111	M1_Curvevalue_2 (4th Byte)	see above	
112	M1_Curvevalue_3 (1st Byte)	see above	User defined value in DIGIFORCE® 9307 value in curve M1 (32-Bit float)
113	M1_Curvevalue_3 (2nd Byte)	see above	
114	M1_Curvevalue_3 (3rd Byte)	see above	
115	M1_Curvevalue_3 (4th Byte)	see above	
116	M1_Curvevalue_4 (1st Byte)	see above	User defined value in DIGIFORCE® 9307 value in curve M1 (32-Bit float)
117	M1_Curvevalue_4 (2nd Byte)	see above	
118	M1_Curvevalue_4 (3rd Byte)	see above	
119	M1_Curvevalue_4 (4th Byte)	see above	
120	M1_Curvevalue_5 (1st Byte)	see above	User defined value in DIGIFORCE® 9307 value in curve M1 (32-Bit float)
121	M1_Curvevalue_5 (2nd Byte)	see above	
122	M1_Curvevalue_5 (3rd Byte)	see above	
123	M1_Curvevalue_5 (4th Byte)	see above	
124	M1_Curvevalue_6 (1st Byte)	see above	User defined value in DIGIFORCE® 9307 value in curve M1 (32-Bit float)
125	M1_Curvevalue_6 (2nd Byte)	see above	
126	M1_Curvevalue_6 (3rd Byte)	see above	
127	M1_Curvevalue_6 (4th Byte)	see above	
128	Live value Channel X (1st Byte)		(32-Bit float) Channel X live value Updating rate of the live values $^{100}/_{sec.}$
129	Live value Channel X (2nd Byte)		
130	Live value Channel X (3rd Byte)		
131	Live value Channel X (4th Byte)		

Byte	Function	Section	Comments
132	Live value Channel Y1 (1_{st} Byte)		(32-Bit float) Channel Y1 live value Updating rate of the live values $^{100}/_{sec}$.
133	Live value Channel Y1 (2_{nd} Byte)		
134	Live value Channel Y1 (3_{rd} Byte)		
135	Live value Channel Y1 (4_{th} Byte)		
136	Live value Channel Y2 (1_{st} Byte)		(32-Bit float) Channel Y2 live value Updating rate of the live values $^{100}/_{sec}$.
137	Live value Channel Y2 (2_{nd} Byte)		
138	Live value Channel Y2 (3_{rd} Byte)		
139	Live value Channel Y2 (4_{th} Byte)		

6 Unconnected Explicit Messaging (Acyclic services)

The services are described from the point of view of the controller.

Please Note: The instance number has always to be set to 1.

The acyclic EtherNet/IP services allow access to following DIGIFORCE® 9307 functions:

- Complete device configuration
- Transfer of component/worker/job data for logging
- Retrieval of large amounts of process and curve data

6.1 Instrument configuration

6.1.1 General settings (Class 768)

Class 768, Attributes 1 to 20

Class	Attribute	Description	Value	Meaning of value	Type	Len	R/W
768	0		-	Not possible			X
768	1…9	Reserved	-	Not possible			X
768	10	Device detection	*DIGIFORCE model 9307*		STR 18	18	RO
768	11	Serial number	*12345678*		STR 11	11	RO
768	12	Software version	*V201404*		STR 25	25	RO
768	13	Version boot loader software	*V201500*		STR 25	25	RO
768	14	Software version Field bus interface	*EIP-V1401*		STR 25	25	RO
768	15	Optional analog interface enabled	*0* *1* *2* *3* *4* *5* *6* *7*	No option Torque Piezo Torque+Piezo Resistance Torque+Resistance Piezo+Resistance Torque+Piezo+ Resistance	U16	2	RO
768	16	Info: Calibration date analog interface	*07.11.2012*		STR 10	10	RO
768	17	Info: Calibration date optional analog interface	*07.11.2012*		STR 10	10	RO
768	18	Reserved	-	Not possible			XX
768	19	Station name	*Stat14 right*		STR 15	15	RW
768	20	Tool counter	*0 … 4294967296*		U32	4	RO

Class 768, Attributes 21 to 40

Class	Attribute	Description	Value	Meaning of value	Type	Len	R/W
768	21	Standard value for tool counter	*0 … 4294967296*		U32	4	RW
768	22	Reset tool counter	*EVENT!*	Writing an arbitrary byte initiates action	U8	1	WO
768	23	Language	*0* *1* *2* *3* *4*	German English French Spanish Italian	U16	2	RW
768	24	Date	*[dd.mm.yyyy]*	e.g.: 21.09.1963	STR 10	10	RW
768	25	Time	*[hh:mm:ss], 24h*	e.g.: 22:15:00	STR 8	8	RW
768	26	LCD brightness	*1 … 10*	Integer value (10 max.)	U16	2	RW
768	27	Background graphical display bright/dark	*0* *1*	dark bright	U16	2	RW
768	28	Measurement menu function key definition F1	*0* *1* *2* *3* *4* *5* *6* *7* *8* *9* *10* *11* *12* *13*	Off Meas. menu page up Meas. menu page down Meas. program incremental Meas. program decremental Tare X Tare Y Tare Y2 Measurement Start/Stop Acknowledge OK parts Acknowledge NOK parts Sensor test Reference measurement Edit mode	U16	2	RW
768	29	Measurement menu function key definition F2	*0* *1* *2* *3* *4* *5* *6* *7* *8* *9* *10* *11* *12* *13*	Off Meas. menu page up Meas. menu page down Meas. program incremental Meas. program decremental Tare X Tare Y Tare Y2 Measurement Start/Stop Acknowledge OK parts Acknowledge NOK parts Sensor test Reference measurement Edit mode	U16	2	RW
768	30	Measurement menu function key definition F3	*0* *1* *2* *3*	Off Meas. menu page up Meas. menu page down Meas. program incremental	U16	2	RW

Class	Attribute	Description	Value	Meaning of value	Type	Len	R/W
			4 *5* *6* *7* *8* *9* *10* *11* *12* *13*	Meas. program decremental Tare X Tare Y Tare Y2 Measurement Start/Stop Acknowledge OK parts Acknowledge NOK parts Sensor test Reference measurement Edit mode			
768	31	Measurement menu function key definition F4	*0* *1* *2* *3* *4* *5* *6* *7* *8* *9* *10* *11* *12* *13*	Off Meas. menu page up Meas. menu page down Meas. program incremental Meas. program decremental Tare X Tare Y Tare Y2 Measurement Start/Stop Acknowledge OK parts Acknowledge NOK parts Sensor test Reference measurement Edit mode	U16	2	RW
768	32	Meas. menu display control GRAPHIC	*0* *1*	Meas. menu disabled Meas. menu enabled	U16	2	RW
768	33	Meas. menu display control Show CURVE ARRAY	*0* *1*	Meas. menu disabled Meas. menu enabled	U16	2	RW
768	34	Meas. menu display control GENERAL CURVE DATA	*0* *1*	Meas. menu disabled Meas. menu enabled	U16	2	RW
768	35	Meas. menu display control TOTAL (Off/Smiley/text)	*0* *1*	Meas. menu disabled Meas. menu enabled	U16	2	RW
768	36	Meas. menu display control ENTRY/EXIT VALUES	*0* *1*	Meas. menu disabled Meas. menu enabled	U16	2	RW
768	37	Meas. menu display control USER DEFINED MEAS. VALUES	*0* *1*	Meas. menu disabled Meas. menu enabled	U16	2	RW

Class	Attribute	Description	Value	Meaning of value	Type	Len	R/W
768	38	Meas. menu display control STATISTICS	*0* *1*	Meas. menu disabled Meas. menu enabled	U16	2	RW
768	39	Meas. menu display control ORDER SHEET	*0* *1*	Meas. menu disabled Meas. menu enabled	U16	2	RW
768	40	Meas. menu display control ROTARY SWITCH	*0* *1*	Meas. menu disabled Meas. menu enabled	U16	2	RW

Class 768, Attributes 41 to 58

Class	Attribute	Description	Value	Meaning of value	Type	Len	R/W
768	41	Display the measurement menu, read the currently displayed measurement menu **Note**: The menu is selected here, but not yet displayed. Display only occurs through access to class 30/115.	*101* *102* *103* *104* *105* *106* *107* *108* *109* *110* *111* *112* *113*	Y1 displaying meas. curves Y2 displaying meas. curves Y1 / Y2 displaying meas. curves General curve data Y1 General curve data Y2 Smiley, Pass/Fail display. Entry/Exit of window Entry/Exit of evaluation elements (except for window) User selected values 1 - 12 User selected values 13 - 24 Display statistics Order sheet Results of evaluation rotary switch	U16	2	RW
768	42	Access authorisation Password protection on/off	*0* *1*	Password protection on Password protection off	U16	2	RW
768	43	Access authorisation BASIC SETUP MENUE	*0* *1*	Access level disabled Access level enabled	U16	2	RW
768	44	Access authorisation MIN. SETUP MENUE	*0* *1*	Access level disabled Access level enabled	U16	2	RW
768	45	Access authorisation MAIN SETUP MENUE	*0* *1*	Access level disabled Access level enabled	U16	2	RW
768	46	Access authorisation CHANNEL SETUP MENUE	*0* *1*	Access level disabled Access level enabled	U16	2	RW

Class	Attribute	Description	Value	Meaning of value	Type	Len	R/W
768	47	Access authorisation MEASUREMENT MODE	*0* *1*	Access level disabled Access level enabled	U16	2	RW
768	48	Access authorisation EVALUATION	*0* *1*	Access level disabled Access level enabled	U16	2	RW
768	49	Access authorisation SWITCHPOINTS	*0* *1*	Access level disabled Access level enabled	U16	2	RW
768	50	Access authorisation TEST OPERATION SIMPLE	*0* *1*	Access level disabled Access level enabled	U16	2	RW
768	51	Access authorisation TEST OPERATION COMPLEX	*0* *1*	Access level disabled Access level enabled	U16	2	RW
768	52	Access authorisation SENSOR TEST	*0* *1*	Access level disabled Access level enabled	U16	2	RW
768	53	Access authorisation USER DEFINED VALUES	*0* *1*	Access level disabled Access level enabled	U16	2	RW
768	54	Access authorisation COPY PROGRAMS	*0* *1*	Access level disabled Access level enabled	U16	2	RW
768	55	Reserved	-	-	-	-	-
768	56	Controller password	*0000 … 9999*		U16	2	RW
768	57	Set Controller password to default	*EVENT!*	Writing an arbitrary byte initiates action	U8	1	WO
768	58	User password	*0000 … 9999*		U16	2	RW

Class 768, Attribute 59 (Assignment PLC outputs 1)

Class	Attribute	Description	Value	Meaning of value	Type	Len	R/W
768	59	PLC output 1 (Pin 2)	*0*	Switchpoint S3	U16	2	RW
768	59	PLC output 1 (Pin 2)	*1*	Switchpoint S4	U16	2	RW
768	59	PLC output 1 (Pin 2)	*2*	Strobe (switch program)	U16	2	RW
768	59	PLC output 1 (Pin 2)	*3*	A0 (switch program)	U16	2	RW
768	59	PLC output 1 (Pin 2)	*4*	A1 (switch program)	U16	2	RW
768	59	PLC output 1 (Pin 2)	*5*	A2 (switch program)	U16	2	RW
768	59	PLC output 1 (Pin 2)	*6*	A3 (switch program)	U16	2	RW
768	59	PLC output 1 (Pin 2)	*7*	A4 (switch program)	U16	2	RW
768	59	PLC output 1 (Pin 2)	*8*	Tare warning	U16	2	RW
768	59	PLC output 1 (Pin 2)	*9*	Warning tool counter	U16	2	RW
768	59	PLC output 1 (Pin 2)	*10*	Warning Total	U16	2	RW
768	59	PLC output 1 (Pin 2)	*11*	OK sensor test	U16	2	RW
768	59	PLC output 1 (Pin 2)	*12*	Test operation simple	U16	2	RW
768	59	PLC output 1 (Pin 2)	*13*	Test operation complex	U16	2	RW
768	59	PLC output 1 (Pin 2)	*14*	Measurement running	U16	2	RW
768	59	PLC output 1 (Pin 2)	*15*	Configuration operation	U16	2	RW
768	59	PLC output 1 (Pin 2)	*16*	Traffic light alarm	U16	2	RW
768	59	PLC output 1 (Pin 2)	*17*	Traffic light lock	U16	2	RW
768	59	PLC output 1 (Pin 2)	*18*	Traffic light OK (green)	U16	2	RW
768	59	PLC output 1 (Pin 2)	*19*	Traffic light NOK (red)	U16	2	RW
768	59	PLC output 1 (Pin 2)	*20*	NOK window 1	U16	2	RW
768	59	PLC output 1 (Pin 2)	*21*	NOK window 2	U16	2	RW
768	59	PLC output 1 (Pin 2)	*22*	NOK window 3	U16	2	RW
768	59	PLC output 1 (Pin 2)	*23*	NOK window 4	U16	2	RW
768	59	PLC output 1 (Pin 2)	*24*	NOK window 5	U16	2	RW

Class	Attribute	Description	Value	Meaning of value	Type	Len	R/W
768	59	PLC output 1 (Pin 2)	*25*	NOK window 6	U16	2	RW
768	59	PLC output 1 (Pin 2)	*26*	NOK window 7	U16	2	RW
768	59	PLC output 1 (Pin 2)	*27*	NOK window 8	U16	2	RW
768	59	PLC output 1 (Pin 2)	*28*	NOK window 9	U16	2	RW
768	59	PLC output 1 (Pin 2)	*29*	NOK window 10	U16	2	RW
768	59	PLC output 1 (Pin 2)	*30*	NOK trapezoid window X 1	U16	2	RW
768	59	PLC output 1 (Pin 2)	*31*	NOK trapezoid window X 3	U16	2	RW
768	59	PLC output 1 (Pin 2)	*32*	NOK trapezoid window Y 1	U16	2	RW
768	59	PLC output 1 (Pin 2)	*33*	NOK trapezoid window X 2	U16	2	RW
768	59	PLC output 1 (Pin 2)	*34*	NOK threshold 1	U16	2	RW
768	59	PLC output 1 (Pin 2)	*35*	NOK threshold 2	U16	2	RW
768	59	PLC output 1 (Pin 2)	*36*	NOK threshold 3	U16	2	RW
768	59	PLC output 1 (Pin 2)	*37*	NOK threshold 4	U16	2	RW
768	59	PLC output 1 (Pin 2)	*38*	NOK envelope 1	U16	2	RW
768	59	PLC output 1 (Pin 2)	*39*	NOK envelope 2	U16	2	RW
768	59	PLC output 1 (Pin 2)	*40*	NOK result math 1	U16	2	RW
768	59	PLC output 1 (Pin 2)	*41*	NOK result math 2	U16	2	RW
768	59	PLC output 1 (Pin 2)	*42*	NOK result math 3	U16	2	RW
768	59	PLC output 1 (Pin 2)	*43*	NOK result math 4	U16	2	RW
768	59	PLC output 1 (Pin 2)	*44*	NOK result math 5	U16	2	RW
768	59	PLC output 1 (Pin 2)	*45*	NOK result math 6	U16	2	RW
768	59	PLC output 1 (Pin 2)	*46*	NOK channel Y1	U16	2	RW
768	59	PLC output 1 (Pin 2)	*47*	NOK channel Y2	U16	2	RW
768	59	PLC output 1 (Pin 2)	*48*	NOK rotary switch 1	U16	2	RW
768	59	PLC output 1 (Pin 2)	*49*	NOK rotary switch 2	U16	2	RW
768	59	PLC output 1 (Pin 2)	*50*	PC logging active (OUT_PC_LOGGING)	U16	2	RW

Class	Attribute	Description	Value	Meaning of value	Type	Len	R/W
768	59	PLC output 1 (Pin 2)	*51*	Reference measurement	U16	2	RW
768	59	PLC output 1 (Pin 2)	*52*	A5 (switch program.) (only if 128 MP)	U16	2	RW
768	59	PLC output 1 (Pin 2)	*53*	A6 (switch program) (only if 128 MP)	U16	2	RW
768	59	PLC output 1 (Pin 2)	*54*	OK channel Y1	U16	2	RW
768	59	PLC output 1 (Pin 2)	*55*	OK channel Y2	U16	2	RW

Class 768, Attributes 60 to 81 (Assignment PLC outputs 2 to 23)

Class	Attribute	Description	Value	Meaning of value	Type	Len	R/W
768	60	PLC output 2 (Pin 6)	*see attr. 59*		U16	2	RW
768	61	PLC output 3 (Pin 8)	*see attr. 59*		U16	2	RW
768	62	PLC output 4 (Pin 9)	*see attr. 59*		U16	2	RW
768	63	PLC output 5 (Pin 10)	*see attr. 59*		U16	2	RW
768	64	PLC output 6 (Pin 11)	*see attr. 59*		U16	2	RW
768	65	PLC output 7 (Pin 12)	*see attr. 59*		U16	2	RW
768	66	PLC output 8 (Pin 13)	*see attr. 59*		U16	2	RW
768	67	PLC output 9 (Pin 16)	*see attr. 59*		U16	2	RW
768	68	PLC output 10 (Pin 17)	*see attr. 59*		U16	2	RW
768	69	PLC output 11 (Pin 21)	*see attr. 59*		U16	2	RW
768	70	PLC output 12 (Pin 22)	*see attr. 59*		U16	2	RW
768	71	PLC output 13 (Pin 23)	*see attr. 59*		U16	2	RW
768	72	PLC output 14 (Pin 24)	*see attr. 59*		U16	2	RW
768	73	PLC output 15 (Pin 25)	*see attr. 59*		U16	2	RW
768	74	PLC output 16 (Pin 26)	*see attr. 59*		U16	2	RW
768	75	PLC output 17 (Pin 27)	*see attr. 59*		U16	2	RW
768	76	PLC output 18 (Pin 28)	*see attr. 59*		U16	2	RW
768	77	PLC output 19 (Pin 29)	*see attr. 59*		U16	2	RW

Class	Attribute	Description	Value	Meaning of value	Type	Len	R/W
768	78	PLC output 20 (Pin 30)	*see attr. 59*		U16	2	RW
768	79	PLC output 21 (Pin 31)	*see attr. 59*		U16	2	RW
768	80	PLC output 22 (Pin 32)	*see attr. 59*		U16	2	RW
768	81	PLC output 23 (Pin 33)	*see attr. 59*		U16	2	RW

Class 768, Attributes 82 to 115

Class	Attribute	Description	Value	Meaning of value	Type	Len	R/W
768	82	Order sheet: Operator	*Michael_ Mueller*		STR 64	64	RW
768	83	Order sheet: Order number	*AN_123456*		STR 64	64	RW
768	84	Order sheet: Batch	*BATCH_ 257-3*		STR 64	64	RW
768	85	Order sheet: Component	*Cylinder_righ t*		STR 64	64	RW
768	86	Order sheet: Serial number 1	*SN_1234567 8 9*		STR 64	64	RW
768	87	Order sheet: Serial number 2	*SN_9876543 2 1*		STR 64	64	RW
768	88	Order sheet: Shift number	*1 … 6*		U16	2	RW
768	89	Order sheet: Shift name Current shift	*Shiftname_ Current_Shift*		STR 64	64	RW
768	90	Order sheet: Shift name Shift 1	*Shiftname_ Shift1*		STR 64	64	RW
768	91	Order sheet: Shift name Shift 2	*Shiftname_ Shift2*		STR 64	64	RW
768	92	Order sheet: Shift name Shift 3	*Shiftname_ Shift3*		STR 64	64	RW
768	93	Order sheet: Shift name Shift 4	*Shiftname_ Shift4*		STR 64	64	RW
768	94	Order sheet: Shift name Shift 5	*Shiftname_ Shift5*		STR 64	64	RW
768	95	Order sheet: Shift name Shift 6	*Shiftname_ Shift6*		STR 64	64	RW
768	96	Order sheet: Reset shift counter Shift selection through writing the shift number	*Shift number*	EVENT! Writing the shift number clears the shift counter concerned	U16	2	WO

Class	Attribute	Description	Value	Meaning of value	Type	Len	R/W
768	97	Order sheet: Shift counter read-out quantity of current shift	*0 … 4294967296*		U32	4	RO
768	98	Order sheet: Shift counter read-out quantity of shift 1	*0 … 4294967296*		U32	4	RO
768	99	Order sheet: Shift counter read-out quantity of shift 2	*0 … 4294967296*		U32	4	RO
768	100	Order sheet: Shift counter read-out quantity of shift 3	*0 … 4294967296*		U32	4	RO
768	101	Order sheet: Shift counter read-out quantity of shift 4	*0 … 4294967296*		U32	4	RO
768	102	Order sheet: Shift counter read-out quantity of shift 5	*0 … 4294967296*		U32	4	RO
768	103	Order sheet: Shift counter read-out quantity of shift 6	*0 … 4294967296*		U32	4	RO
768	104	Order sheet: Shift counter read-out quantity of current NOK counts	*0 … 4294967296*		U32	4	RO
768	105	Order sheet: Shift counter read-out quantity of NOK counts shift 1	*0 … 4294967296*		U32	4	RO
768	106	Order sheet: Shift counter read-out quantity of NOK counts shift 2	*0 … 4294967296*		U32	4	RO
768	107	Order sheet: Shift counter read-out quantity of NOK counts shift 3	*0 … 4294967296*		U32	4	RO
768	108	Order sheet: Shift counter read-out quantity of NOK counts shift 4	*0 … 4294967296*		U32	4	RO
768	109	Order sheet: Shift counter read-out quantity of NOK counts shift 5	*0 … 4294967296*		U32	4	RO
768	110	Order sheet: Shift counter read-out quantity of NOK counts shift 6	*0 … 4294967296*		U32	4	RO

Class	Attribute	Description	Value	Meaning of value	Type	Len	R/W
768	111	Acknowledgement function on/off	*0* *1*	Acknowledgement function off Acknowledgement function on	U16	2	RW
768	112	Acknowledgement function: Acknowledge OK parts on/off	*0* *1*	Not active User has to confirm OK parts (F-Key or PLC input)	U16	2	RW
768	113	Acknowledgement function: Acknowledge NOK parts on/off	*0* *1*	Not active User has to confirm NOK parts (F-Key or PLC input)	U16	2	RW
768	114	Acknowledgement function: Buzzer volume	*0 ... 10*	10: max. volume	U16	2	
768	115	Update display (refresh view)	*Event!*	Writing an arbitrary byte initiates action	U8		

6.1.2 Communication: Change menu, display update, fault indication (Class 770)

Class	Attribute	Description	Value	Meaning of value	Type	Len	R/W
770	0	Not possible	-	-	x	x	x
770	1 - 9	Reserved	-	-	x	x	x
770	10	Go to menu	*0* *1* *2*	Meas. Menu Graphical test menu Complex test menu EVENT! and entry	U16	2	WO
770	11	Initiate update of the LCD display	*EVENT!*	Writing an arbitrary byte initiates action	U8	1	WO
770	12	Fault status of the internal serial communication	*0x00000001*	PREFIX addressing fault	U32	4	RO
770	12	Fault status of the internal serial communication	*0x00000002*	Enquiry received in Device mode	U32	4	RO
770	12	Fault status of the internal serial communication	*0x00000004*	Blockcheck error	U32	4	RO
770	12	Fault status of the internal serial communication	*0x00000008*	Command fault	U32	4	RO
770	12	Fault status of the internal serial communication	*0x00000010*	Parameter error	U32	4	RO
770	12	Fault status of the internal serial communication	*0x00000020*	Timeout Receive Timer	U32	4	RO
770	12	Fault status of the internal serial communication	*0x00000040*	Timeout Response Timer	U32	4	RO

Class	Attribute	Description	Value	Meaning of value	Type	Len	R/W
770	12	Fault status of the internal serial communication	*0x00000080*	Invalid ! or ?	U32	4	RO
770	12	Fault status of the internal serial communication	*0x00000100*	Invalid configuration	U32	4	RO
770	12	Fault status of the internal serial communication	*0x00000200*	Scaling fault	U32	4	RO
770	12	Fault status of the internal serial communication	*0x00000400*	No valid measurements are available	U32	4	RO
770	12	Fault status of the internal serial communication	*0x00000800*	A/D converter overdriven	U32	4	RO
770	12	Fault status of the internal serial communication	*0x00001000*	Fault reading from EEPROM	U32	4	RO
770	12	Fault status of the internal serial communication	*0x00002000*	Overdrive resulting from scaling	U32	4	RO
770	12	Fault status of the internal serial communication	*0x00004000*	Reading out the measurement curve was interrupted by the beginning of a new measurement	U32	4	RO
770	12	Fault status of the internal serial communication	*0x00008000*	Invalid envelope limits	U32	4	RO
770	12	Fault status of the internal serial communication	*0x00010000*	The calibration has not worked	U32	4	RO

6.1.3 Minimal setup menu (Class 771)

Class	Attribute	Description	Value	Meaning of value	Type	Len	R/W
771	0	Not possible	-	-	x	x	x
771	1 - 9	Reserved slots	-	-	x	x	x
771	10	Set program number	*0 ... 31* *0…127*	In the standard device In the corresponding device version	U16	2	RW
771	11	Program name	*Program name*		STR 20	20	RW
771	12	Reset statistics of measurement program	*0 ... 31* *0…127*	In the standard device In the corresponding device version EVENT! Selection through writing the program number	U16	2	WO
771	13	Reset statistics in all measurement programs	*EVENT!*	Writing an arbitrary byte initiates action	U8	1	WO

6.1.4 General channel settings (Class 772)

Class	Attribute	Description	Value	Meaning of value	Type	Len	R/W
772	0	Not possible	-	-			X
772	1 - 9	Reserved slots	-	-			X
772	10	Channel settings channel X **Note**: First make the settings in indices 10, 11, 12, then initiate with attribute 13!	 *0* *1* *2* *3* *4* *5* *6* *7* *8* *9* *10* *11* *12* *13* *14* *15* *16* *17* *18*	Terminals: A, strain gauge A, Potentiometer A, standard signal B, strain gauge B, Potentiometer B, standard signal C, Incr. TTL C, Incr. sinus 1Vpp C, Incr. sinus 11 uApp D, strain gauge D, Potentiometer D, standard signal D, Incr. TTL E, resistance F, Piezo time reserved C, SSI C, EnDat	U16	2	RW
772	11	Channel settings channel Y1 **Note**: First make the settings in indices 10, 11, 12, then initiate with attribute 13!	 *0* *1* *2* *3* *4* *5* *6* *7* *8* *9* *10* *11* *12* *13* *14* *15* *16* *17* *18*	Terminals: A, strain gauge A, Potentiometer A, standard signal B, strain gauge B, Potentiometer B, standard signal C, Incr. TTL C, Incr.sinus 1Vpp C, Incr. sinus 11 uApp D, strain gauge D, Potentiometer D, standard signal D, Incr. TTL E, resistance F, Piezo time reserved C, SSI C, EnDat	U16	2	RW
772	12	Channel settings channel Y2 **Note**: First make the settings in indices 10, 11, 12, then initiate with attribute 13!	 *0* *1* *2* *3* *4* *5* *6*	Terminals: A, strain gauge A, Potentiometer A, standard signal B, strain gauge B, Potentiometer B, standard signal C, Incr. TTL	U16	2	RW

Class	Attribute	Description	Value	Meaning of value	Type	Len	R/W
			7 *8* *9* *10* *11* *12* *13* *14* *15* *16* *17* *18*	C, Incr. sinus 1Vpp C, Incr. sinus 11 uApp D, strain gauge D, Potentiometer D, standard signal D, Incr. TTL E, resistance F, Piezo Time off C, SSI C, EnDat			
772	13	Accept channel settings	*Event!*	The settings from indices 10, 11, 12 are being stored. Writing an arbitrary byte initiates action.	U8	1	WO
772	14	Filter channel X **Note**: Entry is not available for the channel settings "Time" and "Incremental".	*0* *1* *2* *3* *4* *5* *6* *7* *8*	Off 5 Hz filter 10 Hz filter 25 Hz filter 50 Hz filter 100 Hz filter 200 Hz filter 400 Hz filter 800 Hz filter	U16	2	RW
772	15	Filter channel Y1 **Note**: Entry is not available for the channel settings "Time" and "Incremental".	*0* *1* *2* *3* *4* *5* *6* *7* *8*	Off 5 Hz filter 10 Hz filter 25 Hz filter 50 Hz filter 100 Hz filter 200 Hz filter 400 Hz filter 800 Hz filter	U16	2	RW
772	16	Filter channel Y2 **Note**: Entry is not available for the channel settings "Time" and "Incremental"	*0* *1* *2* *3* *4* *5* *6* *7* *8*	Off 5 Hz filter 10 Hz filter 25 Hz filter 50 Hz filter 100 Hz filter 200 Hz filter 400 Hz filter 800 Hz filter	U16	2	RW
772	17	Transmitter supply channel X **Note**: Entry is not available for the channel settings "Piezo" and "Resistance".	*0* *1*	Transmitter supply off Transmitter supply on	U16	2	RW

Class	Attribute	Description	Value	Meaning of value	Type	Len	R/W
772	18	Transmitter supply channel Y1 **Note**: Entry is not available for the channel settings "Piezo" and "Resistance".	*0* *1*	Transmitter supply off Transmitter supply on	U16	2	RW
772	19	Transmitter supply channel Y2 **Note**: Entry is not available for the channel settings "Piezo" and "Resistance".	*0* *1*	Transmitter supply off Transmitter supply on	U16	2	RW
772	20	Set unit channel X **Note**: Entry is not available for the channel settings "Time" and "Resistance".	*0* *1* *2* *3* *4* *5* *6* *7* *8* *9* *10* *11* *12*	User defined unit 1 User defined unit 2 User defined unit 3 mm N kN Nm Ncm Grd Bar V s ms	U16	2	RW
772	21	Set unit channel Y1 **Note**: Entry is not available for the channel settings "Time" and "Resistance".	*0* *1* *2* *3* *4* *5* *6* *7* *8* *9* *10* *11* *12*	User defined unit 1 User defined unit 2 User defined unit 3 mm N kN Nm Ncm Grd Bar V s ms	U16	2	RW

Class	Attribute	Description	Value	Meaning of value	Type	Len	R/W
772	22	Set unit channel Y2 **Note**: Entry is not available for the channel settings "Off", "Time" and "Resistance".	*0* *1* *2* *3* *4* *5* *6* *7* *8* *9* *10* *11* *12*	User defined unit 1 User defined unit 2 User defined unit 3 mm N kN Nm Ncm Grd Bar V s ms	U16	2	RW
772	23	Set user defined unit 1	*abcd*		STR 4	4	RW
772	24	Set user defined unit 1	*abcd*		STR 4	4	RW
772	25	Set user defined unit 3	*ijkl*		STR 4	4	RW
772	26	Take the tare value for channel X and return the measured value **Note**: Entry is not available for the channel settings "Time", "Incremental" and "Resistance".	*EVENT!*		FLT	4	RO
772	27	Take the tare value for channel Y1 and return the measured value **Note**: Entry is not available for the channel settings "Time", "Incremental" and "Resistance".	*EVENT!*		FLT	4	RO
772	28	Take the tare value for channel Y2 and return the measured value **Note**: Entry is not available for the channel settings "Time", "Incremental" and "Resistance".	*EVENT!*		FLT	4	RO

Class	Attribute	Description	Value	Meaning of value	Type	Len	R/W
772	29	Channel to be scaled	*0* *1* *2*	Channel X Channel Y1 Channel Y2	U 16	2	WO
772	30	Lower scale value		Concerns the channel selected under attribute 29	FLT	4	RW
772	31	Upper scale value		Concerns the channel selected under attribute 29	FLT	4	RW
772	32	Lower calibration value		Concerns the channel selected under attribute 29	FLT	4	RW
772	33	Upper calibration value		Concerns the channel selected under attribute 29	FLT	4	RW
772	34	Perform scaling (as per attribute 29 ... 33)	*EVENT*	Entry is not available for the channel settings "Off", "Time", "Incremental" and "Resistance".	U8	1	WO

6.1.5 Channel settings “Potentiometer” (Class 773)

Class	Attribute	Description	Value	Meaning of value	Type	Len	R/W
773	0	Not possible	-	-			X
773	1 - 9	Reserved	-	-			X
773	10	Potentiometer excitation channel X	*0* *1*	5 V excitation 10 V excitation	U16	2	RW
773	11	Potentiometer excitation channel Y1	*0* *1*	5 V excitation 10 V excitation	U16	2	RW
773	12	Potentiometer excitation channel Y2	*0* *1*	5 V excitation 10 V excitation	U16	2	RW

6.1.6 Channel settings “Standard signal” (Class 774)

Class	Attribute	Description	Value	Meaning of value	Type	Len	R/W
774	0	Not possible	-	-			X
774	1 - 9	Reserved	-	-			X
774	10	Standard signal input channel X	*0* *1*	5 V input range 10 V input range	U16	2	RW
774	11	Standard signal input channel Y1	*0* *1*	5 V input range 10 V input range	U16	2	RW
774	12	Standard signal input channel Y2	*0* *1*	5 V input range 10 V input range	U16	2	RW

6.1.7 Channel settings “Strain gauge” (Class 775)

Class	Attribute	Description	Value	Meaning of value	Type	Len	R/W
775	0	Not possible	-	-			X
775	1 - 9	Reserved	-	-			X
775	10	Strain gauge excitation channel X	*0* *1* *2*	2.5 V excitation 5 V excitation 10 V excitation	U16	2	RW
775	11	Strain gauge excitation channel Y1	*0* *1* *2*	2.5 V excitation 5 V excitation 10 V excitation	U16	2	RW
775	12	Strain gauge excitation channel Y2	*0* *1* *2*	2.5 V excitation 5 V excitation 10 V excitation	U16	2	RW
775	13	Strain gauge input range channel X	*0* *1* *2* *3* *4* *5*	1 mV/V input range 2 mV/V input range 4 mV/V input range 10 mV/V input range 20 mV/V input range 40 mV/V input range (40 mV/V are not allowed at 10 V excitation)	U16	2	RW
775	14	Strain gauge input range channel Y1	*0* *1* *2* *3* *4* *5*	1 mV/V input range 2 mV/V input range 4 mV/V input range 10 mV/V input range 20 mV/V input range 40 mV/V input range (40 mV/V are not allowed at 10 V excitation)	U16	2	RW
775	15	Strain gauge input range channel Y2	*0* *1* *2* *3* *4* *5*	1 mV/V input range 2 mV/V input range 4 mV/V input range 10 mV/V input range 20 mV/V input range 40 mV/V input range (40 mV/V are not allowed at 10 V excitation	U16	2	RW
775	16	Strain gauge sensitivity channel X	*0.01 ... 100.0*	IEEE754 Float	FLT	4	RW
775	17	Strain gauge sensitivity channel Y1	*0.01 ... 100.0*	IEEE754 Float	FLT	4	RW
775	18	Strain gauge sensitivity channel Y2l	*0.01 ... 100.0*	IEEE754 Float	FLT	4	RW
775	19	Request strain gauge level channel X	*0.01 ... 100.0*	IEEE754 Float	FLT	4	RO

Class	Attribute	Description	Value	Meaning of value	Type	Len	R/W
775	20	Request strain gauge level channel Y1	*0.01 ... 100.0*	IEEE754 Float	FLT	4	RO
775	21	Request strain gauge level channel Y2	*0.01 ... 100.0*	IEEE754 Float	FLT	4	RO
775	22	Strain gauge shunt channel X	*0* *1* *2* *3* *4* *5*	OFF 10 kOhm 59 kOHM 80 kOHM 100 kOHM 300 kOHM	U16	2	RW
775	23	Strain gauge shunt channel Y1	*0* *1* *2* *3* *4* *5*	OFF 10 kOhm 59 kOHM 80 kOHM 100 kOHM 300 kOHM	U16	2	RW
775	24	Strain gauge shunt channel Y2	*0* *1* *2* *3* *4* *5*	OFF 10 kOhm 59 kOHM 80 kOHM 100 kOHM 300 kOHM	U16	2	RW

6.1.8 Channel settings “Resistance” (Class 776)

Class	Attribute	Description	Value	Meaning of value	Type	Len	R/W
776	0	Not possible	-	-			X
776	1 - 9	Reserved	-	-			X
776	10	Resistance input range channel X	*0* *1* *2*	200 mOhm range 2 kOhm range 100 kOhm range	U16	2	RW
776	11	Resistance input range channel Y1	*0* *1* *2*	200 mOhm range 2 kOhm range 100 kOhm range	U16	2	RW
776	12	Resistance input range channel Y2	*0* *1* *2*	200 mOhm range 2 kOhm range 100 kOhm range	U16	2	RW

6.1.9 Channel settings “Piezo” (Class 777)

Class	Attribute	Description	Value	Meaning of value	Type	Len	R/W
777	0	Not possible	-	-			X
777	1 - 9	Reserved	-	-			X

Class	Attribute	Description	Value	Meaning of value	Type	Len	R/W
777	10	Piezo input range channel X	*0* *1* *2* *3* *4* *5* *6* *7* *8* *9*	1nC range 2nC range 5nC range 10nC range 20nC range 40nC range 80nC range 200nC range 400nC range 1uC range	U16	2	RW
777	11	Piezo input range channel Y1	*0* *1* *2* *3* *4* *5* *6* *7* *8* *9*	1nC range 2nC range 5nC range 10nC range 20nC range 40nC range 80nC range 200nC range 400nC range 1uC range	U16	2	RW
777	12	Piezo input range channel Y2	*0* *1* *2* *3* *4* *5* *6* *7* *8* *9*	1nC range 2nC range 5nC range 10nC range 20nC range 40nC range 80nC range 200nC range 400nC range 1uC range	U16	2	RW
777	13	Piezo short-circuit on/to channel X	*0* *1*	Do not short-circuit piezo input Short-circuit piezo input	U16	2	WO
777	14	Piezo short-circuit on/to channel Y1	*0* *1*	Do not short-circuit piezo input Short-circuit piezo input	U16	2	WO
777	15	Piezo short-circuit on/to channel Y2	*0* *1*	Do not short-circuit piezo input Short-circuit piezo input	U16	2	WO

6.1.10 Channel settings “Incremental” (Class 778)

Class	Attribute	Description	Value	Meaning of value	Type	Len	R/W
778	0	Not possible	-	-			X
778	1 - 9	Reserved	-	-			X
778	10	Incremental reference mark channel X	*0* *1* *2*	reference mark off reference mark on reference mark distance coded	U16	2	RW
778	11	Incremental reference mark channel Y1	*0* *1* *2*	reference mark off reference mark on reference mark distance coded	U16	2	RW

Class	Attribute	Description	Value	Meaning of value	Type	Len	R/W
778	12	Incremental reference mark channel Y2	*0* *1* *2*	reference mark off reference mark on reference mark distance coded	U16	2	RW
778	13	Incremental set value at reference mark channel X	*between - 9999999.0 and 9999999.0*	Float value, Float according to IEEE754	FLT	4	RW
778	14	Incremental set value at reference mark channel Y1	*between - 9999999.0 and 9999999.0*	Float value, Float according to IEEE754	FLT	4	RW
778	15	Incremental set value at reference mark channel Y2	*between - 9999999.0 and 9999999.0*	Float value, Float according to IEEE754	FLT	4	RW
778	16	Incremental reference measurement on/off channel X	*0* *1*	off on	U16	2	RW
778	17	Incremental reference measurement on/off channel Y1	*0* *1*	off on	U16	2	RW
778	18	Incremental reference measurement on/off channel Y2	*0* *1*	off on	U16	2	RW
778	19	Incremental Set to value at start off/on channel X	*0* *1*	on off	U16	2	RW
778	20	Incremental Set to value at start off/on channel Y1	*0* *1*	on off	U16	2	RW
778	21	Incremental Set to value at start off/on channel Y2	*0* *1*	on off	U16	2	RW
778	22	Incremental set value at start channel X	*between - 9999999.0 and 9999999.0*	Float value, Float according to IEEE754	FLT	4	RW
778	23	Incremental set value at start channel Y1	*between - 9999999.0 and 9999999.0*	Float value, Float according to IEEE754	FLT	4	RW

Class	Attribute	Description	Value	Meaning of value	Type	Len	R/W
778	24	Incremental set value at start channel Y2	*between - 9999999.0 and 9999999.0*	Float value, Float according to IEEE754	FLT	4	RW
778	25	Incremental nominal increment channel X	*between - 9999999.0 and 9999999.0*	Float value, Float according to IEEE754	FLT	4	RW
778	26	Incremental nominal increment channel Y1	*between - 9999999.0 and 9999999.0*	Float value, Float according to IEEE754	FLT	4	RW
778	27	Incremental nominal increment channel Y2	*between - 9999999.0 and 9999999.0*	Float value, Float according to IEEE754	FLT	4	RW
778	28	Incremental grating period channel X	*between - 9999999.0 and 9999999.0*	Float value, Float according to IEEE754	FLT	4	RW
778	29	Incremental grating period channel Y1	*between - 9999999.0 and 9999999.0*	Float value, Float according to IEEE754	FLT	4	RW
778	30	Incremental grating period channel Y2	*between - 9999999.0 and 9999999.0*	Float value, Float according to IEEE754	FLT	4	RW
778	31	Incremental interpolation channel X	*between -1 and 65000*	Integer value	U16	2	RW
778	32	Incremental interpolation channel Y1	*between -1 and 65000*	Integer value	U16	2	RW
778	33	Incremental interpolation channel Y2	*between -1 and 65000*	Integer value	U16	2	RW
778	34	Incremental termination resistor off/on channel X	*0* *1*	off on	U16	2	RW
778	35	Incremental termination resistor off/on channel Y1	*0* *1*	off on	U16	2	RW
778	36	Incremental termination resistor off/on channel Y2	*0* *1*	off on	U16	2	RW
778	37	Direction of counting positive/negative channel X	*0* *1*	positive negative	U16	2	RW

Class	Attribute	Description	Value	Meaning of value	Type	Len	R/W
778	38	Direction of counting positive/negative channel X1	*0* *1*	positive negative	U16	2	RW
778	39	Direction of counting positive/negative channel Y2	*0* *1*	positive negative	U16	2	RW

6.1.11 Channel settings “SSI” (Class 779)

Class	Attribute	Description	Value	Meaning of value	Type	Len	R/W
779	0	Not possible	-	-			X
779	1 .. 9	Reserved	-	-			X
779	10	SSI sensor type channel X **Note**: At the end, settings must be initiated through a write access to indices 37/38/39.	*0* *1* *2*	Displacement sensor Singleturn encoder Multiturn encoder	U16	2	RW
779	11	SSI sensor type channel Y1 **Note**: At the end, settings must be initiated through a write access to indices 37/38/39.	*0* *1* *2*	Displacement sensor Singleturn encoder Multiturn encoder	U16	2	RW
779	12	SSI sensor type channel Y2 **Note**: At the end, settings must be initiated through a write access to indices 37/38/39.	*0* *1* *2*	Displacement sensor Singleturn encoder Multiturn encoder	U16	2	RW
779	13	SSI code channel X **Note**: At the end, settings must be initiated through a write access to indices 37/38/39.	*0* *1*	Binary Gray code	U16	2	RW
779	14	SSI code channel Y1 **Note**: At the end, settings must be	*0* *1*	Binary Gray code	U16	2	RW

Class	Attribute	Description	Value	Meaning of value	Type	Len	R/W
		initiated through a write access to indices 37/38/39.					
779	15	SSI code channel Y2 **Note**: At the end, settings must be initiated through a write access to indices 37/38/39.	*0* *1*	Binary Gray code	U16	2	RW
779	16	SSI format channel X **Note**: Only permitted for multiturn angle sensor! At the end, settings must be initiated through a write access to indices 37/38/39.	*0* *1*	Right aligned Tree	U16	2	RW
779	17	SSI format channel Y1 Note: Only permitted for multiturn angle sensor! At the end, settings must be initiated through a write access to indices 37/38/39.	*0* *1*	Right aligned Tree	U16	2	RW
779	18	SSI format channel Y2 **Note**: Only permitted for multiturn angle sensor! At the end, settings must be initiated through a write access to indices 37/38/39.	*0* *1*	Right aligned Tree	U16	2	RW

Class	Attribute	Description	Value	Meaning of value	Type	Len	R/W
779	19	SSI parity channel X **Note**: At the end, settings must be initiated through a write access to indices 37/38/39.	*0* *1*	off even	U16	2	RW
779	20	SSI parity channel Y1 **Note**: At the end, settings must be initiated through a write access to indices 37/38/39.	*0* *1*	off even	U16	2	RW
779	21	SSI parity channel Y2 **Note**: At the end, settings must be initiated through a write access to indices 37/38/39.	*0* *1*	off even	U16	2	RW
779	22	SSI clock frequency channel X **Note**: At the end, settings must be initiated through a write access to indices 37/38/39.	*0* *1* *2*	100 kHz 200 kHz 1 MHz	U16	2	RW
779	23	SSI clock frequency channel Y1 **Note**: At the end, settings must be initiated through a write access to indices 37/38/39.	*0* *1* *2*	100 kHz 200 kHz 1 MHz	U16	2	RW
779	24	SSI clock frequency channel Y2 **Note**: At the end, settings must be initiated through a write access to indices 37/38/39.	*0* *1* *2*	100 kHz 200 kHz 1 MHz	U16	2	RW

Class	Attribute	Description	Value	Meaning of value	Type	Len	R/W
779	25	SSI resolution channel X **Note**: Only permitted for displacement sensors! At the end, settings must be initiated through a write access to indices 37/38/39.	*between - 9999999.0 and 9999999.0*	Float value, Float according to IEEE754	FLT	4	RW
779	26	SSI resolution channel Y1 **Note**: Only permitted for displacement sensors! At the end, settings must be initiated through a write access to indices 37/38/39.	*between - 9999999.0 and 9999999.0*	Float value, Float according to IEEE754	FLT	4	RW
779	27	SSI resolution channel Y2 **Note**: Only permitted for displacement sensors! At the end, settings must be initiated through a write access to indices 37/38/39.	*between - 9999999.0 and 9999999.0*	Float value, Float according to IEEE754	FLT	4	RW
779	28	SSI total number of bits channel X **Note**: At the end, settings must be initiated through a write access to indices 37/38/39.	*0 ... 48*	Integer value	U16	2	RW
779	29	SSI total number of bits channel Y1 **Note**: At the end, settings must be initiated through a write access to indices 37/38/39.	*0 ... 48*	Integer value	U16	2	RW

Class	Attribute	Description	Value	Meaning of value	Type	Len	R/W
779	30	SSI total number of bits channel Y2 **Note**: At the end, settings must be initiated through a write access to indices 37/38/39.	*0 ... 48*	Integer value	U16	2	RW
779	31	SSI bit number angle singleturn or displacement channel X **Note**: At the end, settings must be initiated through a write access to indices 37/38/39.	*0 ... 32*	Integer value	U16	2	RW
779	32	SSI bit number angle singleturn or displacement channel Y1 **Note**: At the end, settings must be initiated through a write access to indices 37/38/39.	*0 ... 32*	Integer value	U16	2	RW
779	33	SSI bit number angle singleturn or displacement channel Y2 **Note**: At the end, settings must be initiated through a write access to indices 37/38/39.	*0 ... 32*	Integer value	U16	2	RW
779	34	SSI bit number rotations for multiturn angle channel X **Note**: At the end, settings must be initiated through a write access to indices 37/38/39.	*0 ... 32*	Integer value	U16	2	RW

Class	Attribute	Description	Value	Meaning of value	Type	Len	R/W
779	35	SSI bit number rotations for multiturn angle channel Y1 **Note**: At the end, settings must be initiated through a write access to indices 37/38/39.	*0 ... 32*	Integer value	U16	2	RW
779	36	SSI bit number rotations for multiturn angle channel Y2 **Note**: At the end, settings must be initiated through a write access to indices 37/38/39.	*0 ... 32*	Integer value	U16	2	RW
779	37	Check & initiate SSI settings channel X	*EVENT!*	Writing an arbitrary byte initiates action	U8	1	WO
779	38	Check & initiate SSI settings channel Y1	*EVENT!*	Writing an arbitrary byte initiates action	U8	1	WO
779	39	Check & initiate SSI settings channel Y2	*EVENT!*	Writing an arbitrary byte initiates action	U8	1	WO

6.1.12 Channel settings “EnDat” (Class 780)

Class	Attribute	Description	Value	Meaning of value	Type	Len	R/W
780	0	Not possible	-	-			X
780	1 .. 9	Reserved	-	-			X
780	10	Read-out EnDat sensor data channel X **Note**: At the end, settings must be initiated through a write access to attribute 16.	*EVENT!*	Writing an arbitrary byte initiates action	U8	1	WO

Class	Attribute	Description	Value	Meaning of value	Type	Len	R/W
780	11	Read-out EnDat sensor data channel Y1 **Note**: At the end, settings must be initiated through a write access to attribute 17.	*EVENT!*	Writing an arbitrary byte initiates action	U8	1	WO
780	12	Read-out EnDat sensor data channel Y2 **Note**: At the end, settings must be initiated through a write access to attribute 18.	*EVENT!*	Writing an arbitrary byte initiates action	U8	1	WO
780	13	EnDat clock frequency channel X **Note**: At the end, settings must be initiated through a write access to attribute 16.	*0* *1* *2* *3*	100k Hz 200 kHz 1 MHz 2 MHz	U16	2	RW
780	14	EnDat clock frequency channel Y1 **Note**: At the end, settings must be initiated through a write access to attribute 17.	*0* *1* *2* *3*	100k Hz 200 kHz 1 MHz 2 MHz	U16	2	RW
780	15	EnDat clock frequency channel Y2 **Note**: At the end, settings must be initiated through a write access to attribute 18.	*0* *1* *2* *3*	100k Hz 200 kHz 1 MHz 2 MHz	U16	2	RW

Class	Attribute	Description	Value	Meaning of value	Type	Len	R/W
780	16	Copy EnDat sensor setup channel X **Note**: Sensor data must be read beforehand, and the clock frequency must be set.	*EVENT!*	Writing an arbitrary byte initiates action	U8	1	WO
780	17	Copy EnDat sensor setup channel Y1 **Note**: Sensor data must be read beforehand, and the clock frequency must be set.	*EVENT!*	Writing an arbitrary byte initiates action	U8	1	WO
780	18	Copy EnDat sensor setup channel Y2 **Note**: Sensor data must be read beforehand, and the clock frequency must be set.	*EVENT!*	Writing an arbitrary byte initiates action	U8	1	WO
780	19	EnDat status channel X **Note**: See comment at the end of the class.	*0* *1*	Ready Error	U16	2	RW
780	20	EnDat status channel Y1 **Note**: See comment at the end of the class.	*0* *1*	Ready Error	U16	2	RW
780	21	EnDat status channel Y2 **Note**: See comment at the end of the class.	*0* *1*	Ready Error	U16	2	RW

Class	Attribute	Description	Value	Meaning of value	Type	Len	R/W
780	22	EnDat standard channel X **Note**: See comment at the end of the class.	*0* *1*	EnDat 2.1 EnDat 2.2	U16	2	RW
780	23	EnDat standard channel Y1 **Note**: See comment at the end of the class.	*0* *1*	EnDat 2.1 EnDat 2.2	U16	2	RW
780	24	EnDat standard channel Y2 **Note**: See comment at the end of the class.	*0* *1*	EnDat 2.1 EnDat 2.2	U16	2	RW
780	25	EnDat name of sensor channel X **Note**: Only available with EnDat 2.2! See comment at the end of the class.	*"angle z-axis"*		STR20	20	RW
780	26	EnDat name of sensor channel Y1 **Note**: Only available with EnDat 2.2! See comment at the end of the class.	*"angle z-axis"*		STR20	20	RW
780	27	EnDat name of sensor channel Y2 **Note**: Only available with EnDat 2.2! See comment at the end of the class.	*"angle z-axis"*		STR20	20	RW
780	28	EnDat sensor serial number channel X **Note**: See comment at the end of the class.	*SN1234567890*		STR20	20	RW

Class	Attribute	Description	Value	Meaning of value	Type	Len	R/W
780	29	EnDat sensor serial number channel Y1 **Note**: See comment at the end of the class.	*SN1234567890*		STR20	20	RW
780	30	EnDat sensor serial number channel Y2 **Note**: See comment at the end of the class.	*SN1234567890*		STR20	20	RW
780	31	EnDat sensor type channel X **Note**: See comment at the end of the class.	*0* *1* *2*	Displacement Singelturn encoder Multiturn encoder	STR20	20	RW
780	32	EnDat sensor type channel Y1 **Note**: See comment at the end of the class.	*0* *1* *2*	Displacement Singelturn encoder Multiturn encoder	STR20	20	RW
780	33	EnDat sensor type channel Y2 **Note**: See comment at the end of the class.	*0* *1* *2*	Displacement Singelturn encoder Multiturn encoder	STR20	20	RW
780	34	EnDat total number of bits channel X **Note**: See comment at the end of the class.	*0 ... 48*	Integer value	U16	2	RW
780	35	EnDat total number of bits channel Y1 **Note**: See comment at the end of the class.	*0 ... 48*	Integer value	U16	2	RW
780	36	EnDat total number of bits channel Y2 **Note**: See comment at the end of the class.	*0 ... 48*	Integer value	U16	2	RW

Class	Attribute	Description	Value	Meaning of value	Type	Len	R/W
780	37	EnDat bit number displacement or angle singleturn channel X **Note**: See comment at the end of the class.	*0 ... 32*	Integer value	U16	2	RW
780	38	EnDat bit number displacement or angle singleturn channel Y1 **Note**: See comment at the end of the class.	*0 ... 32*	Integer value	U16	2	RW
780	39	EnDat bit number displacement or angle singleturn channel Y2 **Note**: See comment at the end of the class.	*0 ... 32*	Integer value	U16	2	RW
780	40	EnDat bit number angle multiturn channel X **Note**: See comment at the end of the class.	*0 ... 32*	Integer value	U16	2	RW
780	41	EnDat bit number angle multiturn channel Y1 **Note**: See comment at the end of the class.	*0 ... 32*	Integer value	U16	2	RW
780	42	EnDat bit number angle multiturn channel Y2 **Note**: See comment at the end of the class.	*0 ... 32*	Integer value	U16	2	RW
780	43	EnDat resolution channel X **Note**: See comment at the end of the class.	*between -9999999.0 and 9999999.0*	Float value	FLT	4	RW

Class	Attribute	Description	Value	Meaning of value	Type	Len	R/W
780	44	EnDat resolution channel Y1 **Note**: See comment at the end of the class.	*between -9999999.0 and 9999999.0*	Float value	FLT	4	RW
780	45	EnDat resolution channel Y2 **Note**: See comment at the end of the class.	*between -9999999.0 and 9999999.0*	Float value	FLT	4	RW
780	38	EnDat bit number displacement or angle singleturn channel Y1 **Note**: See comment at the end of the class.	*0 ... 32*	Integer value	U16	2	RW
780	46	EnDat measuring length for displacement sensor channel X **Note**: See comment at the end of the class.	*16-Bit-Integer value*		U16	2	RW
780	47	EnDat measuring length for displacement sensor channel Y1 **Note**: See comment at the end of the class.	*16-Bit-Integer value*		U16	2	RW
780	48	EnDat measuring length for displacement sensor channel Y2 **Note**: See comment at the end of the class.	*16-Bit-Integer value*		U16	2	RW
780	49	EnDat unit of measuring length channel X **Note**: See comment at the end of the class.	*0* *1* *2* *3*	GP (grating period) µm (Micrometer) mm (Millimeter) m (Meter)	U16	2	RW

Class	Attribute	Description	Value	Meaning of value	Type	Len	R/W
780	50	EnDat unit of measuring length channel Y1 **Note**: See comment at the end of the class.	*0* *1* *2* *3*	GP (grating period) µm (Micrometer) mm (Millimeter) m (Meter)	U16	2	RW
780	51	EnDat unit of measuring length channel Y2 **Note**: See comment at the end of the class.	*0* *1* *2* *3*	GP (grating period) µm (Micrometer) mm (Millimeter) m (Meter)	U16	2	RW
780	52	EnDat max. clock frequency channel X **Note**: Only available with EnDat 2.2! See comment at the end of the class.	*16-Bit-Integer value*		U16	2	RW
780	53	EnDat max. clock frequency channel Y1 **Note**: Only available with EnDat 2.2! See comment at the end of the class.	*16-Bit-Integer value*		U16	2	RW
780	54	EnDat max. clock frequency channel Y2 **Note**: Only available with EnDat 2.2! See comment at the end of the class.	*16-Bit-Integer value*		U16	2	RW
780	55	Transmit EnDat manual sensor setup channel X **Note**: Sensor data must be entered beforehand into the indices 19 ... 54!	*EVENT!*	Writing an arbitrary byte initiates action	U8	1	WO

Class	Attribute	Description	Value	Meaning of value	Type	Len	R/W
780	56	Transmit EnDat manual sensor setup channel Y1 **Note**: Sensor data must be entered beforehand into the indices 19 ... 54!	*EVENT!*	Writing an arbitrary byte initiates action	U8	1	WO
780	57	Transmit EnDat manual sensor setup channel Y2 **Note**: Sensor data must be entered beforehand into the indices 19 ... 54!	*EVENT!*	Writing an arbitrary byte initiates action	U8	1	WO

Class	Attribute	Description	Value	Meaning of value	Type	Len	R/W
780	19 ... 54	Comment on slots 19 … 54: Reading these entries only makes sense if the data has been read from the sensor beforehand (indices 10, 11, 12) It is also possible to write sensor data here. A certain risk is hidden here: If data that is not appropriate for the sensor has been written, the results of the sensor measurements can no longer be read correctly! In cases of doubt, the data should not be written here manually, but should instead be read out of the sensor through indices 10/11/12. After all the sensor data for the channel concerned has been written, they still have to be transferred into the device through a write access to indices 55/56/57, and then adopted by the device's internal FPGA through write access to indices 16/17/18.					

6.1.13 Tare (Class 781)

Class	Attribute	Description	Value	Meaning of value	Type	Len	R/W
781	0	Not possible	-	-			X
781	1 .. 9	Reserved	-	-			X
781	10	Tare at meas. start channel X	*0* *1*	off on	U16	2	RW
781	11	Tare at meas. start channel Y1	*0* *1*	off on	U16	2	RW
781	12	Tare at meas. start channel Y2	*0* *1*	off on	U16	2	RW
781	13	Standard value for tare channel X	*between -9999999.0 and 9999999.0*	Float value, Float according to IEEE754	FLT	4	RW
781	14	Standard value for tare channel Y1	*between -9999999.0 and 9999999.0*	Float value, Float according to IEEE754	FLT	4	RW
781	15	Standard value for tare channel Y2	*between -9999999.0 and 9999999.0*	Float value, Float according to IEEE754	FLT	4	RW
781	16	Tare warning on/off channel X	*0* *1*	off on	U16	2	RW
781	17	Tare warning on/off channel Y1	*0* *1*	off on	U16	2	RW
781	18	Tare warning on/off channel Y2	*0* *1*	off on	U16	2	RW
781	19	Set tare warning limit channel X	*between 1.0 and 20.0*	Float value, Float according to IEEE754	FLT	4	RW
781	20	Set tare warning limit channel Y1	*between 1.0 and 20.0*	Float value Float according to IEEE754	FLT	4	RW
781	21	Set tare warning limit channel Y2	*between 1.0 and 20.0*	Float value Float according to IEEE754	FLT	4	RW
781	22	Tare channel X	*EVENT!*	Writing an arbitrary byte initiates action	U8	1	WO
781	23	Delete tare channel X	*EVENT!*	Writing an arbitrary byte initiates action	U8	1	WO
781	24	Tare channel Y1	*EVENT!*	Writing an arbitrary byte initiates action	U8	1	WO
781	25	Delete tare channel Y1	*EVENT!*	Writing an arbitrary byte initiates action	U8	1	WO
781	26	Tare channel Y2	*EVENT!*	Writing an arbitrary byte initiates action	U8	1	WO
781	27	Delete tare channel Y2	*EVENT!*	Writing an arbitrary byte initiates action	U8	1	WO

6.1.14 Measurement mode (Class 782)

Class	Attribute	Description	Value	Meaning of value	Type	Len	R/W
782	0	Not possible	-	-			X
782	1 .. 9	Reserved	-	-			X
782	10	X sampling off/on	*0* *1*	off on	U16	2	RW
782	11	X sample rate	*between 0.0 and 9999999.0*	Float value Float according to IEEE754	FLT	4	RW
782	12	Y1 sampling off/on	*0* *1*	off on	U16	2	RW
782	13	Y1 sample rate	*between 0.0 and 9999999.0*	Float value Float according to IEEE754	FLT	4	RW
782	14	Y2 sampling off/on	*0* *1*	off on	U16	2	RW
782	15	Y2 sample rate	*between 0.0 and 9999999.0*	Float value Float according to IEEE754	FLT	4	RW
782	16	Time sampling off/on	*0* *1*	off on	U16	2	RW
782	17	Time sample rate	*between 0.0 and 9999999.0*	Float value Float according to IEEE754	FLT	4	RW
782	18	Set reference of curve **Note**: "Underrun" is not permitted if the channel concerned is set to time.	*0* *1* *2* *3* *4* *5* *6* *7* *8* *9*	Absolute Final force Y1 reference line overrun Y1 reference line underrun Y1 trigger overrun Y1 trigger underrun Y2 reference line overrun (not allowed when channel Y2 is off) Y2 reference line underrun (not allowed when channel Y2 is off) Y2 trigger overrun (not allowed when channel Y2 is off) Y2 trigger underrun (not allowed when channel Y2 is off)	U16	2	
782	19	Set reference line Y1	*between -9999999.0 and 9999999.0*	Float value Float according to IEEE754	FLT	4	RW
782	20	Set reference line Y2	*between -9999999.0 and 9999999.0*	Float value Float according to IEEE754	FLT	4	RW

Class	Attribute	Description	Value	Meaning of value	Type	Len	R/W
782	21	Set trigger line Y1	*between -9999999.0 and 9999999.0*	Float value Float according to IEEE754	FLT	4	RW
782	22	Set trigger line Y2	*between -9999999.0 and 9999999.0*	Float value Float according to IEEE754	FLT	4	RW
782	23	Pretrigger display on/off	*0* *1*	off on	U16	2	RW
782	24	Set return point	*0* *1* *2* *3*	XMIN XMAX YMIN YMAX	U16	2	RW
782	25	Set “Record curve to“	*0* *1*	Entire curve Up to return point	U16	2	RW
782	26	Set start mode	*0* *1* *2* *3* *4* *5* *6*	External X internal overrun X internal underrun Y1 internal overrun Y1 internal underrun Y2 internal overrun (not possible if Y2 is switched off) Y2 internal underrun (not possible if Y2 is switched off)	U16	2	RW
782	27	Set stop mode	*0* *1* *2* *3* *4* *5* *6* *7* *8*	External X internal overrun X internal underrun Y1 internal overrun Y1 internal underrun Timeout Defined number of measured values Y2 internal overrun (not possible if Y2 is switched off) Y2 internal underrun (not possible if Y2 is switched off)	U16	2	RW
782	28	Set X start value for internal start	*between -9999999.0 and 9999999.0*	Float value Float according to IEEE754	FLT	4	RW
782	29	Set Y1 start value for internal start	*between -9999999.0 and 9999999.0*	Float value Float according to IEEE754	FLT	4	RW
782	30	Set Y2 start value for internal start	*between -9999999.0 and 9999999.0*	Float value Float according to IEEE754	FLT	4	RW
782	31	Set X stop value for internal start	*between -9999999.0 and 9999999.0*	Float value Float according to IEEE754	FLT	4	RW

Class	Attribute	Description	Value	Meaning of value	Type	Len	R/W
782	32	Set Y1 stop value for internal start	*between -9999999.0 and 9999999.0*	Float value Float according to IEEE754	FLT	4	RW
782	33	Set Y2 stop value for internal start	*between -9999999.0 and 9999999.0*	Float value Float according to IEEE754	FLT	4	RW
782	34	Set the "stop" timeout value	*between -9999999.0 and 9999999.0*	Float value Float according to IEEE754	FLT	4	RW
782	35	Set the "stop" number of measured values	*0 bis 5000*	Integer value	U16	2	RW
782	36	Set bend-up factor	*between -9999999.0 and 9999999.0*	Float value Float according to IEEE754	FLT	4	RW

6.1.15 Evaluation window 1 (Class 783)

Class	Attribute	Description	Value	Meaning of value	Type	Len	R/W
783	0	Not possible	-	-			X
783	1 .. 9	Reserved	-	-			X
783	10	Window 1 off/on	*0* *1*	off on	U16	2	RW
783	11	Window 1 limit Xmin **Note**: At the end, entry must be adopted through attribute 15.	*between -9999999.0 and 9999999.0*	Float value Float according to IEEE754	FLT	4	RW
783	12	Window 1 limit Xmax **Note**: At the end, entry must be adopted through attribute 15.	*between -9999999.0 and 9999999.0*	Float value Float according to IEEE754	FLT	4	RW
783	13	Window 1 limit Ymin **Note**: At the end, entry must be adopted through attribute 15.	*between -9999999.0 and 9999999.0*	Float value Float according to IEEE754	FLT	4	RW

Class	Attribute	Description	Value	Meaning of value	Type	Len	R/W
783	14	Window 1 limit Ymax **Note**: At the end, entry must be adopted through attribute 15.	*between -9999999.0 and 9999999.0*	Float value Float according to IEEE754	FLT	4	RW
783	15	Window 1 copy limit **Note**: Values entered into indices 11, 12, 13, 14 are adopted	*EVENT!*	Writing an arbitrary byte initiates action	U8	1	WO
783	16	Window 1 entry left **Note**: At the end, entry must be adopted through attribute 24.	*0* *1*	no yes	U16	2	RW
783	17	Window 1 entry right **Note**: At the end, entry must be adopted through attribute 24.	*0* *1*	no yes	U16	2	RW
783	18	Window 1 entry bottom **Note**: At the end, entry must be adopted through attribute 24.	*0* *1*	no yes	U16	2	RW
783	19	Window 1 entry top **Note**: At the end, entry must be adopted through attribute 24.	*0* *1*	no yes	U16	2	RW
783	20	Window 1 exit left **Note**: At the end, entry must be adopted through attribute 24.	*0* *1*	no yes	U16	2	RW

Class	Attribute	Description	Value	Meaning of value	Type	Len	R/W
783	21	Window 1 exit right **Note**: At the end, entry must be adopted through attribute 24.	*0* *1*	no yes	U16	2	RW
783	22	Window 1 exit bottom **Note**: At the end, entry must be adopted through attribute 24.	*0* *1*	no yes	U16	2	RW
783	23	Window 1 exit top **Note**: At the end, entry must be adopted through attribute 24.	*0* *1*	no yes	U16	2	RW
783	24	Copy window entry/exit **Note**: Values entered into indices 16 - 23 are adopted	*EVENT!*	no yes	U8	1	WO
783	25	Window 1 evaluation	*0* *1*	off on	U16	2	RW
783	26	Window 1 curve segment for evaluation	*0* *1* *2*	Forward Return Complete curve	U16	2	RW
783	27	Window 1 online evaluation	*0* *1* *2* *3* *4*	Off left - right right - left bottom - top top - bottom	U16	2	RW
783	28	Window 1 online signal number	*1 or 2*		U16	2	RW
783	29	Window 1 Online signal level	*0* *1*	Low active High active	U16	2	RW
783	30	Window 1 "Evaluate only first passage"	*0* *1*	Evaluate all passages (like 9310) Evaluate only fist passage (like 9306)	U16	2	RW
783	31	Window 1 channel Y1/Y2	*1* *2*	Channel Y1 Channel Y2	U16	2	RW
783	32	Window 1 calculate bend in window	*0* *1*	no yes	U16	2	RW

Class	Attribute	Description	Value	Meaning of value	Type	Len	R/W
783	33	Window 1 delta gradient for bend	*between 0.0 and 9999999.0*	Float value Float according to IEEE754	FLT	4	RW
783	34	Window 1 delta-Y for bend	*between 0.0 and 9999999.0*	Float value Float according to IEEE754	FLT	4	RW
783	35	Window 1 calculate absolute maximum	*0* *1*	no yes	U16	2	RW
783	36	Window 1 calculate absolute minimum	*0* *1*	no yes	U16	2	RW
783	37	Window 1 calculate local maximum	*0* *1*	no yes	U16	2	RW
783	38	Window 1 set delta-Y for local maximum	*between 0.0 and 9999999.0*	Float value Float according to IEEE754	FLT	4	RW
783	39	Window 1 set 1st local minimum	*0* *1*	no yes	U16	2	RW
783	40	Window 1 set delta-Y for local minimum	*between 0.0 and 9999999.0*	Float value Float according to IEEE754	FLT	4	RW
783	41	Window 1 calculate mean value	*0* *1*	no yes	U16	2	RW
783	42	Window 1 calculate gradient	*0* *1*	no yes	U16	2	RW
783	43	Window 1 calculate area under curve	*0* *1*	no yes	U16	2	RW

6.1.16 Evaluation window 2 (Class 784)

Class	Attribute	Description	Value	Meaning of value	Type	Len	R/W
784	0	Not possible	-	-			X
784	1 .. 9	Reserved	-	-			X
784	10 ...	See class 783					

6.1.17 Evaluation window 3 (Class 785)

Class	Attribute	Description	Value	Meaning of value	Type	Len	R/W
785	0	Not possible	-	-			X
785	1 .. 9	Reserved	-	-			X
785	10 ...	See class 783					

6.1.18 Evaluation window 4 (Class 786)

Class	Attribute	Description	Value	Meaning of value	Type	Len	R/W
786	0	Not possible	-	-			X
786	1 .. 9	Reserved	-	-			X
786	10 ...	See class 783					

6.1.19 Evaluation window 5 (Class 787)

Class	Attribute	Description	Value	Meaning of value	Type	Len	R/W
787	0	Not possible	-	-			X
787	1 .. 9	Reserved	-	-			X
787	10 ...	See class 783					

6.1.20 Evaluation window 6 (Class 788)

Class	Attribute	Description	Value	Meaning of value	Type	Len	R/W
788	0	Not possible	-	-			X
788	1 .. 9	Reserved	-	-			X
788	10 ...	See class 783					

6.1.21 Evaluation window 7 (Class 789)

Class	Attribute	Description	Value	Meaning of value	Type	Len	R/W
789	0	Not possible	-	-			X
789	1 .. 9	Reserved	-	-			X
789	10 ...	See class 783					

6.1.22 Evaluation window 8 (Class 790)

Class	Attribute	Description	Value	Meaning of value	Type	Len	R/W
790	0	Not possible	-	-			X
790	1 .. 9	Reserved	-	-			X
790	10 ...	See class 783					

6.1.23 Evaluation window 9 (Class 791)

Class	Attribute	Description	Value	Meaning of value	Type	Len	R/W
791	0	Not possible	-	-			X
791	1 .. 9	Reserved	-	-			X
791	10 ...	See class 783					

6.1.24 Evaluation window 10 (Class 792)

Class	Attribute	Description	Value	Meaning of value	Type	Len	R/W
792	0	Not possible	-	-			X
792	1 .. 9	Reserved	-	-			X
792	10 ...	See class 783					

6.1.25 Evaluation trapezoid window X1 (Class 793)

Class	Attribute	Description	Value	Meaning of value	Type	Len	R/W
793	0	Not possible	-	-			X
793	1 .. 9	Reserved	-	-			X
793	10 ...	Trapezoid X1 off/on	*0* *1*	off on	U16	2	RW
793	11	Trapezoid X1 limit Xmin	*between -9999999.0 and 9999999.0*	Float value Float according to IEEE754	FLT	4	RW
793	12	Trapezoid X1 limit Xmax **Note**: At the end, entry must be adopted through attribute 17.	*between -9999999.0 and 9999999.0*	Float value Float according to IEEE754	FLT	4	RW

Class	Attribute	Description	Value	Meaning of value	Type	Len	R/W
793	13	Trapezoid X1 Y limit max. left **Note**: At the end, entry must be adopted through attribute 17.	*between -9999999.0 and 9999999.0*	Float value Float according to IEEE754	FLT	4	RW
793	14	Trapezoid X1 Y limit max. right **Note**: At the end, entry must be adopted through attribute 17.	*between -9999999.0 and 9999999.0*	Float value Float according to IEEE754	FLT	4	RW
793	15	Trapezoid X1 Y limit min. left **Note**: At the end, entry must be adopted through attribute 17.	*between -9999999.0 and 9999999.0*	Float value Float according to IEEE754	FLT	4	RW
793	16	Trapezoid X1 Y limit min. right **Note**: At the end, entry must be adopted through attribute 17.	*between -9999999.0 and 9999999.0*	Float value Float according to IEEE754	FLT	4	RW
793	17	Trapezoid X1 copy the limits **Note**: Values entered into indices 11 - 16 are adopted	*EVENT*	Writing an arbitrary byte initiates action	U8	1	WO
793	18	Trapezoid X1 entry left **Note**: At the end, entry must be adopted through attribute 22.	*0* *1*	no yes	U16	2	RW
793	19	Trapezoid X1 entry right **Note**: At the end, entry must be adopted through attribute 22.	*0* *1*	no yes	U16	2	RW

Class	Attribute	Description	Value	Meaning of value	Type	Len	R/W
793	20	Trapezoid X1 exit left **Note**: At the end, entry must be adopted through attribute 22.	*0* *1*	no yes	U16	2	RW
793	21	Trapezoid X1 exit right Note: At the end, entry must be adopted through attribute 22.	*0* *1*	no yes	U16	2	RW
793	22	Trapezoid X1 copy entry/exit **Note**: Values entered into indices 16 - 21 are adopted.	*EVENT*	Writing an arbitrary byte initiates action	U8	1	WO
793	23	Trapezoid X1 evaluation	*0* *1*	off on	U16	2	RW
793	24	Trapezoid X1 curve segment for evaluation	*0* *1* *2*	Forward Return Complete curve	U16	2	RW
793	25	Trapezoid X1 "Evaluate only first passage"	*0* *1*	Evaluate all passages (like 9310) Evaluate only first passage (like 9306)	U16	2	RW
793	26	Trapezoid X1 channel Y1/Y2	*1* *2*	Channel Y1 Channel Y2	U16	2	RW

6.1.26 Evaluation trapezoid window X2 (Class 794)

Class	Attribute	Description	Value	Meaning of value	Type	Len	R/W
794	0	Not possible	-	-			X
794	1 .. 9	Reserved	-	-			X
794	10 ...	See class 793					

6.1.27 Evaluation trapezoid window Y1 (Class 795)

Class	Attribute	Description	Value	Meaning of value	Type	Len	R/W
795	0	Not possible	-	-			X
795	1 .. 9	Reserved	-	-			X
795	10	Trapezoid Y1 off/on	*0* *1*	off on	U16	2	RW

Class	Attribute	Description	Value	Meaning of value	Type	Len	R/W
795	11	Trapezoid Y1 limit Ymin	*between -9999999.0 and 9999999.0*	Float value Float according to IEEE754	FLT	4	RW
795	12	Trapezoid Y1 limit Ymax **Note**: At the end, entry must be adopted through attribute 17.	*between -9999999.0 and 9999999.0*	Float value Float according to IEEE754	FLT	4	RW
795	13	Trapezoid Y1 X limit min top **Note**: At the end, entry must be adopted through attribute 17.	*between -9999999.0 and 9999999.0*	Float value Float according to IEEE754	FLT	4	RW
795	14	Trapezoid Y1 X limit max top **Note**: At the end, entry must be adopted through attribute 17.	*between -9999999.0 and 9999999.0*	Float value Float according to IEEE754	FLT	4	RW
795	15	Trapezoid Y1 X limit min bottom **Note**: At the end, entry must be adopted through attribute 17.	*between -9999999.0 and 9999999.0*	Float value Float according to IEEE754	FLT	4	RW
795	16	Trapezoid Y1 X limit max bottom **Note**: At the end, entry must be adopted through attribute 17.	*between -9999999.0 and 9999999.0*	Float value Float according to IEEE754	FLT	4	RW
795	17	Trapezoid Y1 copy limits **Note**: Values entered into indices 11 - 16 are adopted	*EVENT*	Writing an arbitrary byte initiates action	U8	1	WO
795	18	Trapezoid Y1 entry bottom **Note**: At the end, entry must be adopted through attribute 22.	*0* *1*	no yes	U16	2	RW

Class	Attribute	Description	Value	Meaning of value	Type	Len	R/W
795	19	Trapezoid Y1 entry top **Note**: At the end, entry must be adopted through attribute 22.	*0* *1*	no yes	U16	2	RW
795	20	Trapezoid Y1 exit bottom **Note**: At the end, entry must be adopted through attribute 22.	*0* *1*	no yes	U16	2	RW
795	21	Trapezoid Y1 exit top **Note**: At the end, entry must be adopted through attribute 22.	*0* *1*	no yes	U16	2	RW
795	22	Trapezoid Y1 copy entry/exit **Note**: Values entered into indices 16 - 21 are adopted	*EVENT*	Writing an arbitrary byte initiates action	U8	1	WO
795	23	Trapezoid Y1 evaluation	*0* *1*	off on	U16	2	RW
795	24	Trapezoid Y1 Curve segment for evaluation	*0* *1* *2*	Forward Return Complete curve	U16	2	RW
795	25	Trapezoid Y1 "Evaluate only first passage"	*0* *1*	Evaluate all passages (like 9310) Evaluate only first passages (like 9306)	U16	2	RW
795	26	Trapezoid Y1 channel Y1/Y2	*1* *2*	Channel Y1 Channel Y2	U16	2	RW

6.1.28 Evaluation trapezoid window Y2 (Class 796)

Class	Attribute	Description	Value	Meaning of value	Type	Len	R/W
796	0	Not possible	-	-			X
796	1 .. 9	Reserved	-	-			X
796	10 ...	See class 795					

6.1.29 Evaluation threshold 1 (Class 797)

Class	Attribute	Description	Value	Meaning of value	Type	Len	R/W
797	0	Not possible	-	-			X
797	1 .. 9	Reserved	-	-			X
797	10	Threshold 1 off/on	*0* *1*	off on	U16	2	RW
797	11	Threshold 1 type of threshold	*0* *1*	Type X (vertical) Type Y (horizontal)	U16	2	RW
797	12	Threshold 1 position Type X: X value Type Y: Y value **Note**: At the end, entry must be adopted through attribute 15.	*between -9999999.0 and 9999999.0*	Float value Float according to IEEE754	FLT	4	RW
797	13	Threshold 1 limit For type X: Ymin For type Y: Xmin **Note**: At the end, entry must be adopted through attribute 15.	*between -9999999.0 and 9999999.0*	Float value Float according to IEEE754	FLT	4	RW
797	14	Threshold 1 limit For type X: Ymax For type Y: Xmax **Note**: At the end, entry must be adopted through attribute 15.	*between -9999999.0 and 9999999.0*	Float value Float according to IEEE754	FLT	4	RW
797	15	Threshold 1 copy position and limits **Note**: Values entered into indices 11 - 14 are adopted	*EVENT*	Writing an arbitrary byte initiates action	U8	1	WO
797	16	Threshold 1 passage Type X: left > right Type Y: bottom > top **Note**: At the end, entry must be adopted through attribute 18.	*0* *1*	no yes	U16	2	RW

Class	Attribute	Description	Value	Meaning of value	Type	Len	R/W
797	17	Threshold 1 passage Type X: right > left Type Y: top > bottom **Note**: At the end, entry must be adopted through attribute 18.	*0* *1*	no yes	U16	2	RW
797	18	Threshold 1 Copy passage **Note**: Values entered into indices 16 - 17 are adopted	*EVENT*	Writing an arbitrary byte initiates action	U8	1	WO
797	19	Threshold 1 evaluation	*0* *1*	off on	U16	2	RW
797	20	Threshold 1 Curve segment for evaluation	*0* *1* *2*	Forward Return Complete curve	U16	2	RW
797	21	Threshold 1 "Evaluate only first passage"	*0* *1*	Evaluate all passages (like 9310) Evaluate only first passage (like 9306)	U16	2	RW
797	22	Threshold 1 Channel Y1/Y2	*1* *2*	Channel Y1 Channel Y2	U16	2	RW
797	23	Threshold 1 Calculate bend **Note**: Only for type Y	*0* *1*	no yes	U16	2	RW
797	24	Threshold 1 Delta gradient for bend	*between 0.0 and 9999999.0*	Float value Float according to IEEE754	FLT	4	RW
797	25	Threshold 1 Delta Y bend	*between 0.0 and 9999999.0*	Float value Float according to IEEE754	FLT	4	RW
797	26	Threshold 1 Calculate absolute maximum **Note**: Only for type Y	*0* *1*	no yes	U16	2	RW
797	27	Threshold 1 Calculate absolute minimum **Note**: Only for type Y	*0* *1*	no yes	U16	2	RW

Class	Attribute	Description	Value	Meaning of value	Type	Len	R/W
797	28	Threshold 1 Calculate local maximum **Note**: Only for type Y	*0* *1*	no yes	U16	2	RW
797	29	Threshold 1 Delta Y local maximum	*between 0.0 and 9999999.0*	Float value Float according to IEEE754	FLT	4	RW
797	30	Threshold 1 Calculate local minimum **Note**: Only for type Y	*0* *1*	no yes	U16	2	RW
797	31	Threshold 1 Delta Y local minimum	*between 0.0 and 9999999.0*	Float value Float according to IEEE754	FLT	4	RW
797	32	Threshold 1 Calculate mean value **Note**: Only for type Y	*0* *1*	no yes	U16	2	RW
797	33	Threshold 1 Calculate gradient **Note**: Only for type Y	*0* *1*	no yes	U16	2	RW
797	34	Threshold 1 Calculate area **Note**: Only for type Y	*0* *1*	no yes	U16	2	RW

6.1.30 Evaluation threshold 2 (Class 798)

Class	Attribute	Description	Value	Meaning of value	Type	Len	R/W
798	0	Not possible	-	-			X
798	1 .. 9	Reserved	-	-			X
798	10 ...	See class 797					

6.1.31 Evaluation threshold 3 (Class 799)

Class	Attribute	Description	Value	Meaning of value	Type	Len	R/W
799	0	Not possible	-	-			X
799	1 .. 9	Reserved	-	-			X
799	10 ...	See class 797					

6.1.32 Evaluation threshold 4 (Class 800)

Class	Attribute	Description	Value	Meaning of value	Type	Len	R/W
800	0	Not possible	-	-			X
800	1 .. 9	Reserved	-	-			X
800	10 ...	See class 797					

6.1.33 Evaluation envelope 1 (Class 801 to 805)

Class/attribute data on request

6.1.34 Evaluation envelope 2 (Class 806 to 810)

Class/attribute data on request

6.1.35 Evaluation rotary switch 1 (Class 811)

Class/attribute data on request

6.1.36 Evaluation rotary switch 2 (Class 812)

Class/attribute data on request

6.1.37 Evaluation mathematical functions (Class 813)

Class	Attribute	Description	Value	Meaning of value	Type	Len	R/W
813	0	Not possible	-	-			X
813	1 .. 9	Reserved	-	-			X
813	10	Math. function Constant 1	*between -9999999.0 and 9999999.0*	Float value Float according to IEEE754	FLT	4	RW
813	11	Math. function Constant 2	*between -9999999.0 and 9999999.0*	Float value Float according to IEEE754	FLT	4	RW

Class	Attribute	Description	Value	Meaning of value	Type	Len	R/W
813	12	Math. function Constant 3	*between -9999999.0 and 9999999.0*	Float value Float according to IEEE754	FLT	4	RW
813	13	Math. function Constant 4	*between -9999999.0 and 9999999.0*	Float value Float according to IEEE754	FLT	4	RW
813	14	Math. function Constant 5	*between -9999999.0 and 9999999.0*	Float value Float according to IEEE754	FLT	4	RW
813	15	Math. function Constant 6	*between -9999999.0 and 9999999.0*	Float value Float according to IEEE754	FLT	4	RW
813	16	Math. function Constant 7	*between -9999999.0 and 9999999.0*	Float value Float according to IEEE754	FLT	4	RW
813	17	Math. function Constant 8	*between -9999999.0 and 9999999.0*	Float value Float according to IEEE754	FLT	4	RW
813	18	Math. function Constant 9	*between -9999999.0 and 9999999.0*	Float value Float according to IEEE754	FLT	4	RW
813	19	Math. function Constant 10	*between -9999999.0 and 9999999.0*	Float value Float according to IEEE754	FLT	4	RW
813	20	Math. function formula row 1 operand A **Note**: At the end, entry must be adopted through attribute 23.	*Integer value*	See operand table in appendix	U16	2	RW
813	21	Math. function formula row 1 operator **Note**: At the end, entry must be adopted through attribute 23.	*0* *1* *2* *3*	Sum up Subtract Multiply Divide	U16	2	RW

Class	Attribute	Description	Value	Meaning of value	Type	Len	R/W
813	22	Math. function formula row 1 operand B **Note**: At the end, entry must be adopted through attribute 23.	*Integer value*	See operand table in appendix	U16	2	RW
813	23	Math. function Copy formula 1 **Note**: Values entered into indices 20 - 22 are adopted	*EVENT*	Writing an arbitrary byte initiates action	U8	1	WO
813	24	Math. function formula row 2 operand A **Note**: At the end, entry must be adopted through attribute 27.	*Integer value*	See operand table in appendix	U16	2	RW
813	25	Math. function formula row 2 Operator **Note**: At the end, entry must be adopted through attribute 27.	*0* *1* *2* *3*	Sum up Subtract Multiply Divide	U16	2	RW
813	26	Math. function formula row 2 operand B **Note**: At the end, entry must be adopted through attribute 27.	*Integer value*	See operand table in appendix	U16	2	RW
813	27	Math. function Copy formula 2 **Note**: Values entered into indices 24 - 26 are adopted	*EVENT*	Writing an arbitrary byte initiates action	U8	1	WO

Class	Attribute	Description	Value	Meaning of value	Type	Len	R/W
813	28	Math. function formula row 3 operand A **Note**: At the end, entry must be adopted through attribute 31.	*Integer value*	See operand table in appendix	U16	2	RW
813	29	Math. function formula row 3 operator **Note**: At the end, entry must be adopted through attribute 31.	*0* *1* *2* *3*	Sum up Subtract Multiply Divide	U16	2	RW
813	30	Math. function formula row 3 operand B **Note**: At the end, entry must be adopted through attribute 31.	*Integer value*	See operand table in appendix	U16	2	RW
813	31	Math. function Copy formula 3 **Note**: Values entered into indices 28 - 30 are adopted.	*EVENT*	Writing an arbitrary byte initiates action	U8	1	WO
813	32	Math. function formula row 4 operand A **Note**: At the end, entry must be adopted through attribute 35.	*Integer value*	See operand table in appendix	U16	2	RW
813	33	Math. function formula row 4 operator **Note**: At the end, entry must be adopted through attribute 35.	*0* *1* *2* *3*	Sum up Subtract Multiply Divide	U16	2	RW

Class	Attribute	Description	Value	Meaning of value	Type	Len	R/W
813	34	Math. function formula row 4 operand B **Note**: At the end, entry must be adopted through attribute 35.	*Integer value*	See operand table in appendix	U16	2	RW
813	35	Math. function Copy formula 4 **Note**: Values entered into indices 32 - 34 are adopted.	*EVENT*	Writing an arbitrary byte initiates action	U8	1	WO
813	36	Math. function formula row 5 operand A **Note**: At the end, entry must be adopted through attribute 39.	*Integer value*	See operand table in appendix	U16	2	RW
813	37	Math. function formula row 5 operator **Note**: At the end, entry must be adopted through attribute 39.	*0* *1* *2* *3*	Sum up Subtract Multiply Divide	U16	2	RW
813	38	Math. function formula row 5 operand B **Note**: At the end, entry must be adopted through attribute 39.	*Integer value*	See operand table in appendix	U16	2	RW
813	39	Math. function Copy formula 5 **Note**: Values entered into indices 36 - 38 are adopted.	*EVENT*	Writing an arbitrary byte initiates action	U8	1	WO

Class	Attribute	Description	Value	Meaning of value	Type	Len	R/W
813	40	Math. function formula row 6 operand A **Note**: At the end, entry must be adopted through attribute 43.	*Integer value*	See operand table in appendix	U16	2	RW
813	41	Math. function formula row 6 operator **Note**: At the end, entry must be adopted through attribute 43.	*0* *1* *2* *3*	Sum up Subtract Multiply Divide	U16	2	RW
813	42	Math. function formula row 6 operand B **Note**: At the end, entry must be adopted through attribute 43.	*Integer value*	See operand table in appendix	U16	2	RW
813	43	Math. function Copy formula 6 **Note**: Values entered into indices 40 - 42 are adopted.	*EVENT*	Writing an arbitrary byte initiates action	U8	1	WO
813	44	Math. function formula row 7 operand A **Note**: At the end, entry must be adopted through attribute 47.	*Integer value*	See operand table in appendix	U16	2	RW
813	45	Math. function formula row 7 operator **Note**: At the end, entry must be adopted through attribute 47.	*0* *1* *2* *3*	Sum up Subtract Multiply Divide	U16	2	RW

Class	Attribute	Description	Value	Meaning of value	Type	Len	R/W
813	46	Math. function formula row 7 operand B **Note**: At the end, entry must be adopted through attribute 47.	*Integer value*	See operand table in appendix	U16	2	RW
813	47	Math. function Copy formula 7 **Note**: Values entered into indices 44 - 46 are adopted.	*EVENT*	Writing an arbitrary byte initiates action	U8	1	WO
813	48	Math. function formula row 8 operand A **Note**: At the end, entry must be adopted through attribute 51.	*Integer value*	See operand table in appendix	U16	2	RW
813	49	Math. function formula row 8 operator **Note**: At the end, entry must be adopted through attribute 51.	*0* *1* *2* *3*	Sum up Subtract Multiply Divide	U16	2	RW
813	50	Math. function formula row 8 operand B **Note**: At the end, entry must be adopted through attribute 51.	*Integer value*	See operand table in appendix	U16	2	RW
813	51	Math. function Copy formula 8 **Note**: Values entered into indices 48 - 50 are adopted.	*EVENT*	Writing an arbitrary byte initiates action	U8	1	WO

Class	Attribute	Description	Value	Meaning of value	Type	Len	R/W
813	52	Math. function formula row 9 operand A **Note**: At the end, entry must be adopted through attribute 55.	*Integer value*	See operand table in appendix	U16	2	RW
813	53	Math. function formula row 9 operator **Note**: At the end, entry must be adopted through attribute 55.	*0* *1* *2* *3*	Sum up Subtract Multiply Divide	U16	2	RW
813	54	Math. function formula row 9 operand B **Note**: At the end, entry must be adopted through attribute 55.	*Integer value*	See operand table in appendix	U16	2	RW
813	55	Math. function Copy formula 9 **Note**: Values entered into indices 52 - 54 are adopted.	*EVENT*	Writing an arbitrary byte initiates action	U8	1	WO
813	56	Math. function formula row 10 operand A **Note**: At the end, entry must be adopted through attribute 59.	*Integer value*	See operand table in appendix	U16	2	RW
813	57	Math. function formula row 10 operator **Note**: At the end, entry must be adopted through attribute 59.	*0* *1* *2* *3*	Sum up Subtract Multiply Divide	U16	2	RW

Class	Attribute	Description	Value	Meaning of value	Type	Len	R/W
813	58	Math. function formula row 10 operand B **Note**: At the end, entry must be adopted through attribute 59.	*Integer value*	See operand table in appendix	U16	2	RW
813	59	Math. function Copy formula 10 **Note**: Values entered into indices 56 - 58 are adopted.	*EVENT*	Writing an arbitrary byte initiates action	U8	1	WO
813	60	Math. function Evaluation operand 1 **Note**: At the end, entry must be adopted through attribute 63.	*Integer value*	See operand table in appendix	U16	2	RW
813	61	Math. function Evaluation operand 1 Min. tolerance limit **Note**: At the end, entry must be adopted through attribute 63.	*between -9999999.0 and 9999999.0*	Float value Float according to IEEE754	FLT	4	RW
813	62	Math. function Evaluation operand 1 Max. tolerance limit **Note**: At the end, entry must be adopted through attribute 63.	*between -9999999.0 and 9999999.0*	Float value Float according to IEEE754	FLT	4	RW
813	63	Math. function Copy evaluation1 **Note**: Values entered into indices 60 - 62 are adopted.	*EVENT*	Writing an arbitrary byte initiates action	U8	1	WO

Class	Attribute	Description	Value	Meaning of value	Type	Len	R/W
813	64	Math. function Evaluation operand 2 **Note**: At the end, entry must be adopted through attribute 67.	*Integer value*	See operand table in appendix	U16	2	RW
813	65	Math. function Evaluation operand 2 Min. tolerance limit **Note**: At the end, entry must be adopted through attribute 67.	*between -9999999.0 and 9999999.0*	Float value Float according to IEEE754	FLT	4	RW
813	66	Math. function Evaluation operand 2 Max. tolerance limit **Note**: At the end, entry must be adopted through attribute 67.	*between -9999999.0 and 9999999.0*	Float value Float according to IEEE754	FLT	4	RW
813	67	Math. function Copy evaluation 2 **Note**: Values entered into indices 64 - 66 are adopted.	*EVENT*	Writing an arbitrary byte initiates action	U8	1	WO
813	68	Math. function Evaluation operand 3 **Note**: At the end, entry must be adopted through attribute 71.	*Integer value*	See operand table in appendix	U16	2	RW

Class	Attribute	Description	Value	Meaning of value	Type	Len	R/W
813	69	Math. function Evaluation operand 3 Min. tolerance limit **Note**: At the end, entry must be adopted through attribute 71.	*between -9999999.0 and 9999999.0*	Float value Float according to IEEE754	FLT	4	RW
813	70	Math. function Evaluation operand 3 Max. tolerance limit **Note**: At the end, entry must be adopted through attribute 71.	*between -9999999.0 and 9999999.0*	Float value Float according to IEEE754	FLT	4	RW
813	71	Math. function Copy evaluation 3 **Note**: Values entered into indices 68 - 70 are adopted.	EVENT	Writing an arbitrary byte initiates action	U8	1	WO
813	72	Math. function Evaluation operand 4 **Note**: At the end, entry must be adopted through attribute 75.	*Integer value*	See operand table in appendix	U16	2	RW
813	73	Math. function Evaluation operand 4 Min. tolerance limit **Note**: At the end, entry must be adopted through attribute 75.	*between -9999999.0 and 9999999.0*	Float value Float according to IEEE754	FLT	4	RW

Class	Attribute	Description	Value	Meaning of value	Type	Len	R/W
813	74	Math. function Evaluation operand 4 Max-tolerance limit **Note**: At the end, entry must be adopted through attribute 75.	*between -9999999.0 and 9999999.0*	Float value Float according to IEEE754	FLT	4	RW
813	75	Math. function Copy evaluation 4 **Note**: Values entered into indices 72 - 74 are adopted.	*EVENT*	Writing an arbitrary byte initiates action	U8	1	WO
813	76	Math. function Evaluation operand 5 **Note**: At the end, entry must be adopted through attribute 79.	*Integer value*	See operand table in appendix	U16	2	RW
813	77	Math. function Evaluation operand 5 Min. tolerance limit **Note**: At the end, entry must be adopted through attribute 79.	*between -9999999.0 and 9999999.0*	Float value Float according to IEEE754	FLT	4	RW
813	78	Math. function Evaluation operand 5 Max. tolerance limit **Note**: At the end, entry must be adopted through attribute 79.	*between -9999999.0 and 9999999.0*	Float value Float according to IEEE754	FLT	4	RW
813	79	Math. function Copy evaluation 5 **Note**: Values entered into indices 76 - 78 are adopted.	*EVENT*	Writing an arbitrary byte initiates action	U8	1	WO

Class	Attribute	Description	Value	Meaning of value	Type	Len	R/W
813	80	Math. function Evaluation operand 6 **Note**: At the end, entry must be adopted through attribute 83.	*Integer value*	See operand table in appendix	U16	2	RW
813	81	Math. function Evaluation operand 6 Min. tolerance limit **Note**: At the end, entry must be adopted through attribute 83.	*between -9999999.0 and 9999999.0*	Float value Float according to IEEE754	FLT	4	RW
813	82	Math. function Evaluation operand 6 Max. tolerance limit **Note**: At the end, entry must be adopted through attribute 83.	*between -9999999.0 and 9999999.0*	Float value Float according to IEEE754	FLT	4	RW
813	83	Math. function Copy evaluation 6 **Note**: Values entered into indices 80 - 82 are adopted.	*EVENT*	Writing an arbitrary byte initiates action	U8	1	WO

6.1.38 Tolerance band for evaluation elements (Class 814)

Class	Attribute	Description	Value	Meaning of value	Type	Len	R/W
814	0	Not possible	-	-			X
814	1 .. 9	Reserved	-	-			X
814	10	Tolerance band X **Note**: At the end, entry must be adopted through attribute 13.	*between 0.0 and 9999999.0*	Float value Float according to IEEE754	FLT	4	RW
814	11	Tolerance band Y1 **Note**: At the end, entry must be adopted through attribute 13.	*between 0.0 and 9999999.0*	Float value Float according to IEEE754	FLT	4	RW
814	12	Tolerance band Y2 **Note**: At the end, entry must be adopted through attribute 13.	*between 0.0 and 9999999.0*	Float value Float according to IEEE754	FLT	4	RW
814	13	Copy tolerance bands **Note**: Values entered into indices 10 - 12 are adopted.	*EVENT*	Writing an arbitrary byte initiates action	U8	1	WO

6.1.39 Realtime switchpoints S1 (Class 815)

Class	Attribute	Description	Value	Meaning of value	Type	Len	R/W
815	0	Not possible	-	-			X
815	1 .. 9	Reserved	-	-			X
815	10	Switchpoint S1 value **Note**: At the end, entry must be adopted through attribute 14.	*between -9999999.0 and 9999999.0*	Float value Float according to IEEE754	FLT	4	RW

Class	Attribute	Description	Value	Meaning of value	Type	Len	R/W
815	11	Switchpoint S1 channel **Note**: At the end, entry must be adopted through attribute 14.	*0* *1* *2*	Channel X Channel Y1 Channel Y2	U16	2	RW
815	12	Switchpoint S1 level **Note**: At the end, entry must be adopted through attribute 14.	*0* *1*	Low active High active	U16	2	RW
815	13	Switchpoint 1 reference **Note**: At the end, entry must be adopted through attribute 14.	*0* *1*	Absolute reference Trigger reference	U16	2	RW
815	14	Switchpoint 1 Copy settings **Note**: Values entered into indices 10 - 13 are adopted.	*EVENT*	Writing an arbitrary byte initiates action	U8	1	WO

6.1.40 Realtime switchpoints S2 (Class 816)

Class	Attribute	Description	Value	Meaning of value	Type	Len	R/W
816	0	Not possible	-	-			X
816	1 .. 9	Reserved	-	-			X
816	10..	See class 815					

6.1.41 Realtime switchpoints S3 (Class 817)

Class	Attribute	Description	Value	Meaning of value	Type	Len	R/W
817	0	Not possible	-	-			X
817	1 .. 9	Reserved	-	-			X
817	10..	See class 815					

6.1.42 Realtime switchpoints S4 (Class 818)

Class	Attribute	Description	Value	Meaning of value	Type	Len	R/W
818	0	Not possible	-	-			X
818	1 .. 9	Reserved	-	-			X
818	10..	See class 815					

6.1.43 Sensortest (Class 819)

Class	Attribute	Description	Value	Meaning of value	Type	Len	R/W
819	0	Not possible	-	-			X
819	1 .. 9	Reserved	-	-			X
819	10	Sensor test Channel X on/off	*0* *1*	off on	U16	2	RW
819	11	Sensor test Channel Y1 on/off	*0* *1*	off on	U16	2	RW
819	12	Sensor test Channel Y2 on/off	*0* *1*	off on	U16	2	RW
819	13	Sensor test Channel X measure reference value	*EVENT*	Writing an arbitrary byte initiates action	U8	1	WO
819	14	Sensor test Channel Y1 measure reference value	*EVENT*	Writing an arbitrary byte initiates action	U8	1	WO
819	15	Sensor test Channel Y2 measure reference value	*EVENT*	Writing an arbitrary byte initiates action	U8	1	WO
819	16	Sensor test Channel X reference value	*between -9999999.0 and 9999999.0*	Float value Float according to IEEE754	FLT	4	RW
819	17	Sensor test Channel Y1 reference value	*between -9999999.0 and 9999999.0*	Float value Float according to IEEE754	FLT	4	RW
819	18	Sensor test Channel Y2 reference value	*between -9999999.0 and 9999999.0*	Float value Float according to IEEE754	FLT	4	RW
819	19	Sensor test Channel X allowed deviation	*between 0.0 and 9999999.0*	Float value Float according to IEEE754	FLT	4	RW

Class	Attribute	Description	Value	Meaning of value	Type	Len	R/W
819	20	Sensor test Channel Y1 allowed deviation	*between 0.0 and 9999999.0*	Float value Float according to IEEE754	FLT	4	RW
819	21	Sensor test Channel Y2 allowed deviation	*between 0.0 and 9999999.0*	Float value Float according to IEEE754	FLT	4	RW
819	22	Initiate sensor test **Note**: Read access initiates the sensor test and delivers the result.	*0* *1*	NOK OK	U16	2	RO

6.1.44 Setup user-defined values (Class 820)

Class	Attribute	Description	Value	Meaning of value	Type	Len	R/W
820	0	Not possible	-	-			X
820	1 .. 9	Reserved	-	-			X
820	10	User-defined values value 1	*Integer value*	See operand table in appendix	U16	2	RW
820	11	User-defined values value 2	*Integer value*	See operand table in appendix	U16	2	RW
820	12	User-defined values value 3	*Integer value*	See operand table in appendix	U16	2	RW
820	13	User-defined values value 4	*Integer value*	See operand table in appendix	U16	2	RW
820	14	User-defined values value 5	*Integer value*	See operand table in appendix	U16	2	RW
820	15	User-defined values value 6	*Integer value*	See operand table in appendix	U16	2	RW
820	16	User-defined values value 7	*Integer value*	See operand table in appendix	U16	2	RW
820	17	User-defined values value 8	*Integer value*	See operand table in appendix	U16	2	RW
820	18	User-defined values value 9	*Integer value*	See operand table in appendix	U16	2	RW
820	19	User-defined values value 10	*Integer value*	See operand table in appendix	U16	2	RW

Class	Attribute	Description	Value	Meaning of value	Type	Len	R/W
820	20	User-defined values value 11	*Integer value*	See operand table in appendix	U16	2	RW
820	21	User-defined values value 12	*Integer value*	See operand table in appendix	U16	2	RW
820	22	User-defined values value 13	*Integer value*	See operand table in appendix	U16	2	RW
820	23	User-defined values value 14	*Integer value*	See operand table in appendix	U16	2	RW
820	24	User-defined values value 15	*Integer value*	See operand table in appendix	U16	2	RW
820	25	User-defined values value 16	*Integer value*	See operand table in appendix	U16	2	RW
820	26	User-defined values value 17	*Integer value*	See operand table in appendix	U16	2	RW
820	27	User-defined values value 18	*Integer value*	See operand table in appendix	U16	2	RW
820	28	User-defined values value 19	*Integer value*	See operand table in appendix	U16	2	RW
820	29	User-defined values value 20	*Integer value*	See operand table in appendix	U16	2	RW
820	30	User-defined values value 21	*Integer value*	See operand table in appendix	U16	2	RW
820	31	User-defined values value 22	*Integer value*	See operand table in appendix	U16	2	RW
820	32	User-defined values value 23	*Integer value*	See operand table in appendix	U16	2	RW
820	33	User-defined values value 24	*Integer value*	See operand table in appendix	U16	2	RW
820	34	User-defined values value 25 **Note**: Values 25 ... 30 will also be displayed as results in process window M1 (curve)	*Integer value*	See operand table in appendix	U16	2	RW
820	35	User-defined values value 26	*Integer value*	See operand table in appendix	U16	2	RW
820	36	User-defined values value 27	*Integer value*	See operand table in appendix	U16	2	RW
820	37	User-defined values value 28	*Integer value*	See operand table in appendix	U16	2	RW
820	38	User-defined values value 29	*Integer value*	See operand table in appendix	U16	2	RW
820	39	User-defined values value 30	*Integer value*	See operand table in appendix	U16	2	RW

6.1.45 Copy/initialize measurement programs (Class 821)

Class	Attribute	Description	Value	Meaning of value	Type	Len	R/W
821	0	Not possible	-	-		X	X
821	1 .. 9	Reserved	-	-		X	X
821	10	Meas. program number source **Note**: The settings from indices 10 - 12 are being adopted through indices 13, 14 or 15.	*0 ... 31* *0…127*	In the standard device In the corresponding device version	U16	2	WO
821	11	Meas. program number Target start **Note**: The settings from indices 10 - 12 are being adopted through indices 13, 14 or 15.	*0 ... 31* *0…127*	In the standard device In the corresponding device version	U16	2	WO
821	12	Meas. program number Target end **Note**: The settings from indices 10 - 12 are being adopted through indices 13, 14 or 15.	*0 ... 31* *0…127*	In the standard device In the corresponding device version	U16	2	WO
821	13	Copy whole program setup **Note**: Copy according to entries in indices 10 - 12.	*EVENT*	Writing an arbitrary byte initiates action	U8	1	WO
821	14	Copy sensor setup **Note**: Copy according to entries in indices 10 - 12.	*EVENT*	Writing an arbitrary byte initiates action	U8	1	WO

Class	Attribute	Description	Value	Meaning of value	Type	Len	R/W
821	15	Initialize selected programs **Note**: Initializing according to indices 11 - 12.	*EVENT*	Writing an arbitrary byte initiates action	U8	1	WO
821	16	Initialize all measurement programs	*EVENT*	Writing an arbitrary byte initiates action	U8	1	WO

6.1.46 Reference curve Y1, Y2 (Class 822 to 826)

Class/attribute data on request

6.1.47 Test operation (Class 827)

Class	Attribute	Description	Value	Meaning of value	Type	Len	R/W
827	0	Not possible					
827	1…9	Reserved					
827	10	Current measurement value channel X	*Float value*	Float according to IEEE754	FLT	4	RO
827	11	Current measurement value channel Y	*Float value*	Float according to IEEE754	FLT	4	RO
827	12	Current measurement value channel Y	*Float value*	Float according to IEEE754	FLT	4	RO

6.1.48 Zoom and autoscale (Class 828)

Class	Attribute	Description	Value	Meaning of value	Type	Len	R/W
828	0	Not possible	-	-		X	X
828	1…9	Reserved	-	-		X	X
828	10	Switching autoscale/fix scale	*0* *1*	Autoscale off Autoscale on	U16	2	RW
828	11	Fix scale Xmin channel Y1 **Note**: At the end, entry must be adopted through attribute 15.	*Float value*	Float according to IEEE754	FLT	4	RW

Class	Attribute	Description	Value	Meaning of value	Type	Len	R/W
828	12	Fix scale Xmax channel Y1 **Note**: At the end, entry must be adopted through attribute 15.	*Float value*	Float according to IEEE754	FLT	4	RW
828	13	Fix scale Ymin channel Y1 **Note**: At the end, entry must be adopted through attribute 15.	*Float value*	Float according to IEEE754	FLT	4	RW
828	14	Fix scale Ymax channel Y1 **Note**: At the end, entry must be adopted through attribute 15.	*Float value*	Float according to IEEE754	FLT	4	RW
828	15	Copy fix scale channel Y1 **Note**: Values entered into indices 11 - 14 are adopted.	*EVENT!*	Writing an arbitrary byte initiates action	U8	1	WO
828	16	Fix scale Xmin channel Y2 **Note**: At the end, entry must be adopted through attribute 20.	*Float value*	Float according to IEEE754	FLT	4	RW
828	17	Fix scale Xmax channel Y2 **Note**: At the end, entry must be adopted through attribute 20.	*Float value*	Float according to IEEE754	FLT	4	RW
828	18	Fix scale Ymin channel Y2 **Note**: At the end, entry must be adopted through attribute 20.	*Float value*	Float according to IEEE754	FLT	4	RW

Class	Attribute	Description	Value	Meaning of value	Type	Len	R/W
828	19	Fix scale Ymax channel Y2 **Note**: At the end, entry must be adopted through attribute 20.	*Float value*	Float according to IEEE754	FLT	4	RW
828	20	Copy fix scale channel Y2 **Note**: Values entered into indices 16 - 19 are adopted.	*EVENT!*	Writing an arbitrary byte initiates action	U8	1	WO

6.2 Measurement results

6.2.1 Status of measurement

Class	Attribute	Description	Value	Meaning of value	Type	Len	R/W
838	0	Not possible	-	-		X	X
838	1…9	Reserved				X	X
838	10	Index of the last measured value of the current curve **Caution**: The number of the pair of values is shown on the display. The attribute begins at 0, the number at 1!	*16 Bit Integer value*	0 means that there is no measurement curve	U16	2	RO
838	11	Running measurement curve counter	*32 Bit Integer value*	This counter is incremented by 1 when a measurement curve is newly acquired	U32	4	RO
838	12	Amount of curves in current array of curves	*0…10*	Integer value between 0 and 10	U16	2	RO

6.2.2 Further information for current measurement curve

Class	Attribute	Description	Value	Meaning of value	Type	Len	R/W
839	0	Not possible	-	-		X	X
839	1…9	Reserved	-	-		X	X
839	10	Counter	*32 Bit Integer value*		U32	4	RO
839	11	NOK counter (sum)	*32 Bit Integer value*		U32	4	RO
839	12	Total evaluation	*0* *1*	NOK OK	U16	2	RO
839	13	Evaluation channel Y1	*0* *1*	NOK OK	U16	2	RO
839	14	Evaluation channel Y2	*0* *1*	NOK OK	U16	2	RO
839	15	Index of the curve´s return point **Caution**: The number of the pair of values is shown on the display. The attribute begins at 0, the number at 1!	*16 Bit Integer value*		U16	2	RO
839	16	Index of the last measured value of the curve **Caution**: The number of the pair of values is shown on the display. The attribute begins at 0, the number at 1!	*16 Bit Integer value*		U16	2	RO
839	17	Status overdrive of the A/D converter	*0* *1*	No overdrive Overdrive	U16	2	RO
839	18	Date of recording	*String in format dd.mm.yyyy*		STR 10	10	RO
839	19	Time of recording hh:mm:ss	*String in format hh:mm:ss*		STR 8	8	RO

Class	Attribute	Description	Value	Meaning of value	Type	Len	R/W
839	20	Unit channel X	*String with max. 4 characters, e.g. "N" or "inch"*		STR 4	4	RO
839	21	Unit channel Y1	*String with max. 4 characters, e.g. "N" or "inch"*		STR 4	4	RO
839	22	Unit channel Y2	*String with max. 4 characters, e.g. "N" or "inch"*		STR 4	4	RO

6.2.3 Further information for current pretrigger curve

Class	Attribute	Description	Value	Meaning of value	Type	Len	R/W
840	0	Not possible	-	-		X	X
840	1…9	Reserved	-	-		X	X
840	10	Pretrigger recording on/off	*0* *1*	off on	U16	2	RO
840	11	Whole amount of pretrigger values	*32 Bit Integer value*		U32	4	RO
840	12	Index of first pretrigger value (0…255)	*0…255*	Integer value between 0…255	U16	2	RO
840	13	Index of X-last pretrigger value (0…255)	*0…255*	Integer value between 0…255	U16	2	RO

6.2.4 General curve data channel Y1

Class	Attribute	Description	Value	Meaning of value	Type	Len	R/W
841	0	Not possible	-	-		X	X
841	1…9	Reserved	-	-		X	X
841	10	X-minimum, X-coordinate	*Float value*	Float according to IEEE754	FLT	4	RO
841	11	X-minimum, Y1-coordinate	*Float value*	Float according to IEEE754	FLT	4	RO
841	12	X-maximum, X-coordinate	*Float value*	Float according to IEEE754	FLT	4	RO
841	13	X-maximum, Y1-coordinate	*Float value*	Float according to IEEE754	FLT	4	RO
841	14	Y1-minimum, X-coordinate	*Float value*	Float according to IEEE754	FLT	4	RO

Class	Attribute	Description	Value	Meaning of value	Type	Len	R/W
841	15	Y1-minimum, Y1-coordinate	*Float value*	Float according to IEEE754	FLT	4	RO
841	16	Y1-maximum, X-coordinate	*Float value*	Float according to IEEE754	FLT	4	RO
841	17	Y1-maximum, Y1-coordinate	*Float value*	Float according to IEEE754	FLT	4	RO
841	18	First value X-coordinate	*Float value*	Float according to IEEE754	FLT	4	RO
841	19	First value Y1-coordinate	*Float value*	Float according to IEEE754	FLT	4	RO
841	20	Last value X-coordinate	*Float value*	Float according to IEEE754	FLT	4	RO
841	21	Last value Y1-coordinate	*Float value*	Float according to IEEE754	FLT	4	RO
841	22	Return point X-coordinate	*Float value*	Float according to IEEE754	FLT	4	RO
841	23	Return point Y1-coordinate	*Float value*	Float according to IEEE754	FLT	4	RO

6.2.5 General curve data channel Y2

Class	Attribute	Description	Value	Meaning of value	Type	Len	R/W
842	0	Not possible	-	-		X	X
842	1…9	Reserved	-	-		X	X
842	10	See class 841					

6.2.6 Request measurement results of user-defined values

Class	Attribute	Description	Value	Meaning of value	Type	Len	R/W
843	0	Not possible	-	-		X	X
843	1…9	Reserved	-	-		X	X
843	10	User-defined value 1 name	*String with the designator of the value*	Designator = "0" means that no value is defined for this value number	STR 16	16	RO
843	11	User-defined value 1 measurement value	*Float value*	Float according to IEEE754	FLT	4	RO
843	12	User-defined value 1 unit	*String with max. 4 characters, e.g. "N" or "inch"*	See operand table in appendix	STR 4	4	RO

Class	Attribute	Description	Value	Meaning of value	Type	Len	R/W
843	13	User-defined value 2 name	*String with the designator of the value*	Designator = "0" means that no value is defined for this value number	STR 16	16	RO
843	14	User-defined value 2 measurement value	*Float value*	Float according to IEEE754	FLT	4	RO
843	15	User-defined value 2 unit	*String with max. 4 characters, e.g. "N" or "inch"*	See operand table in appendix	STR 4	4	RO
843	16	User-defined value 3 name	*String with the designator of the value*	Designator = "0" means that no value is defined for this value number	STR 16	16	RO
843	17	User-defined value 3 measurement value	*Float value*	Float according to IEEE754	FLT	4	RO
843	18	User-defined value 3 unit	*String with max. 4 characters, e.g. "N" or "inch"*	See operand table in appendix	STR 4	4	RO
843	19	User-defined value 4 name	*String with the designator of the value*	Designator = "0" means that no value is defined for this value number	STR 16	16	RO
843	20	User-defined value 4 measurement value	*Float value*	Float according to IEEE754	FLT	4	RO
843	21	User-defined value 4 unit	*String with max. 4 characters, e.g. "N" or "inch"*	See operand table in appendix	STR 4	4	RO
843	22	User-defined value 5 name	*String with the designator of the value*	Designator = "0" means that no value is defined for this value number	STR 16	16	RO
843	23	User-defined value 5 measurement value	*Float value*	Float according to IEEE754	FLT	4	RO
843	24	User-defined value 5 unit	*String with max. 4 characters, e.g. "N" or "inch"*	See operand table in appendix	STR 4	4	RO

Class	Attribute	Description	Value	Meaning of value	Type	Len	R/W
843	25	User-defined value 6 name	*String with the designator of the value*	Designator = "0" means that no value is defined for this value number	STR 16	16	RO
843	26	User-defined value 6 measurement value	*Float value*	Float according to IEEE754	FLT	4	RO
843	27	User-defined value 6 unit	*String with max. 4 characters, e.g. "N" or "inch"*	See operand table in appendix	STR 4	4	RO
843	28	User-defined value 7 name	*String with the designator of the value*	Designator = "0" means that no value is defined for this value number	STR 16	16	RO
843	29	User-defined value 7 measurement value	*Float value*	Float according to IEEE754	FLT	4	RO
843	30	User-defined value 7 unit	*String with max. 4 characters, e.g. "N" or "inch"*	See operand table in appendix	STR 4	4	RO
843	31	User-defined value 8 name	*String with the designator of the value*	Designator = "0" means that no value is defined for this value number	STR 16	16	RO
843	32	User-defined value 8 measurement value	*Float value*	Float according to IEEE754	FLT	4	RO
843	33	User-defined value 8 unit	*String with max. 4 characters, e.g. "N" or "inch"*	See operand table in appendix	STR 4	4	RO
843	34	User-defined value 9 name	*String with the designator of the value*	Designator = "0" means that no value is defined for this value number	STR 16	16	RO
843	35	User-defined value 9 measurement value	*Float value*	Float according to IEEE754	FLT	4	RO
843	36	User-defined value 9 unit	*String with max. 4 characters, e.g. "N" or "inch"*	See operand table in appendix	STR 4	4	RO

Class	Attribute	Description	Value	Meaning of value	Type	Len	R/W
843	37	User-defined value 10 name	*String with the designator of the value*	Designator = "0" means that no value is defined for this value number	STR 16	16	RO
843	38	User-defined value 10 measurement value	*Float value*	Float according to IEEE754	FLT	4	RO
843	39	User-defined value 10 unit	*String with max. 4 characters, e.g. "N" or "inch"*	See operand table in appendix	STR 4	4	RO
843	40	User-defined value 11 name	*String with the designator of the value*	Designator = "0" means that no value is defined for this value number	STR 16	16	RO
843	41	User-defined value 11 measurement value	*Float value*	Float according to IEEE754	FLT	4	RO
843	42	User-defined value 11 unit	*String with max. 4 characters, e.g. "N" or "inch"*	See operand table in appendix	STR 4	4	RO
843	43	User-defined value 12 name	*String with the designator of the value*	Designator = "0" means that no value is defined for this value number	STR 16	16	RO
843	44	User-defined value 12 measurement value	*Float value*	Float according to IEEE754	FLT	4	RO
843	45	User-defined value 12 unit	*String with max. 4 characters, e.g. "N" or "inch"*	See operand table in appendix	STR 4	4	RO
843	46	User-defined value 13 name	*String with the designator of the value*	Designator = "0" means that no value is defined for this value number	STR 16	16	RO
843	47	User-defined value 13 measurement value	*Float value*	Float according to IEEE754	FLT	4	RO
843	48	User-defined value 13 unit	*String with max. 4 characters, e.g. "N" or "inch"*	See operand table in appendix	STR 4	4	RO

Class	Attribute	Description	Value	Meaning of value	Type	Len	R/W
843	49	User-defined value 14 name	*String with the designator of the value*	Designator = "0" means that no value is defined for this value number	STR 16	16	RO
843	50	User-defined value 14 measurement value	*Float value*	Float according to IEEE754	FLT	4	RO
843	51	User-defined value 14 unit	*String with max. 4 characters, e.g. "N" or "inch"*	See operand table in appendix	STR 4	4	RO
843	52	User-defined value 15 name	*String with the designator of the value*	Designator = "0" means that no value is defined for this value number	STR 16	16	RO
843	53	User-defined value 15 measurement value	Float value	Float according to IEEE754	FLT	4	RO
843	54	User-defined value 15 unit	String with max. 4 characters, e.g. "N" or "inch"	See operand table in appendix	STR 4	4	RO
843	55	User-defined value 16 name	String with the designator of the value	Designator = "0" means that no value is defined for this value number	STR 16	16	RO
843	56	User-defined value 16 measurement value	Float value	Float according to IEEE754	FLT	4	RO
843	57	User-defined value 16 unit	String with max. 4 characters, e.g. "N" or "inch"	See operand table in appendix	STR 4	4	RO
843	58	User-defined value 17 name	String with the designator of the value	Designator = "0" means that no value is defined for this value number	STR 16	16	RO
843	59	User-defined value 17 measurement value	Float value	Float according to IEEE754	FLT	4	RO
843	60	User-defined value 17 unit	String with max. 4 characters, e.g. "N" or "inch"	See operand table in appendix	STR 4	4	RO

Class	Attribute	Description	Value	Meaning of value	Type	Len	R/W
843	61	User-defined value 18 name	String with the designator of the value	Designator = "0" means that no value is defined for this value number	STR 16	16	RO
843	62	User-defined value 18 measurement value	Float value	Float according to IEEE754	FLT	4	RO
843	63	User-defined value 18 unit	String with max. 4 characters, e.g. "N" or "inch"	See operand table in appendix	STR 4	4	RO
843	64	User-defined value 19 name	String with the designator of the value	Designator = "0" means that no value is defined for this value number	STR 16	16	RO
843	65	User-defined value 19 measurement value	Float value	Float according to IEEE754	FLT	4	RO
843	66	User-defined value 19 unit	String with max. 4 characters, e.g. "N" or "inch"	See operand table in appendix	STR 4	4	RO
843	67	User-defined value 20 name	String with the designator of the value	Designator = "0" means that no value is defined for this value number	STR 16	16	RO
843	68	User-defined value 20 measurement value	Float value	Float according to IEEE754	FLT	4	RO
843	69	User-defined value 20 unit	*String with max. 4 characters, e.g. "N" or "inch"*	See operand table in appendix	STR 4	4	RO
843	70	User-defined value 21 name	*String with the designator of the value*	Designator = "0" means that no value is defined for this value number	STR 16	16	RO
843	71	User-defined value 21 measurement value	*Float value*	Float according to IEEE754	FLT	4	RO
843	72	User-defined value 21 unit	*String with max. 4 characters, e.g. "N" or "inch"*	See operand table in appendix	STR 4	4	RO

Class	Attribute	Description	Value	Meaning of value	Type	Len	R/W
843	73	User-defined value 22 name	*String with the designator of the value*	Designator = "0" means that no value is defined for this value number	STR 16	16	RO
843	74	User-defined value 22 measurement value	*Float value*	Float according to IEEE754	FLT	4	RO
843	75	User-defined value 22 unit	*String with max. 4 characters, e.g. "N" or "inch"*	See operand table in appendix	STR 4	4	RO
843	76	User-defined value 23 name	*String with the designator of the value*	Designator = "0" means that no value is defined for this value number	STR 16	16	RO
843	77	User-defined value 23 measurement value	*Float value*	Float according to IEEE754	FLT	4	RO
843	78	User-defined value 23 unit	*String with max. 4 characters, e.g. "N" or "inch"*	See operand table in appendix	STR 4	4	RO
843	79	User-defined value 24 name	*String with the designator of the value*	Designator = "0" means that no value is defined for this value number	STR 16	16	RO
843	80	User-defined value 24 measurement value	*Float value*	Float according to IEEE754	FLT	4	RO
843	81	User-defined value 24 unit	*String with max. 4 characters, e.g. "N" or "inch"*	See operand table in appendix	STR 4	4	RO
843	82	User-defined value 25 name	*String with the designator of the value*	Designator = "0" means that no value is defined for this value number	STR 16	16	RO
843	83	User-defined value 25 measurement value	*Float value*	Float according to IEEE754	FLT	4	RO
843	84	User-defined value 25 unit	*String with max. 4 characters, e.g. "N" or "inch"*	See operand table in appendix	STR 4	4	RO

Class	Attribute	Description	Value	Meaning of value	Type	Len	R/W
843	85	User-defined value 26 name	*String with the designator of the value*	Designator = "0" means that no value is defined for this value number	STR 16	16	RO
843	86	User-defined value 26 measurement value	*Float value*	Float according to IEEE754	FLT	4	RO
843	87	User-defined value 26 unit	*String with max. 4 characters, e.g. "N" or "inch"*	See operand table in appendix	STR 4	4	RO
843	88	User-defined value 27 name	*String with the designator of the value*	Designator = "0" means that no value is defined for this value number	STR 16	16	RO
843	89	User-defined value 27 measurement value	*Float value*	Float according to IEEE754	FLT	4	RO
843	90	User-defined value 27 unit	*String with max. 4 characters, e.g. "N" or "inch"*	See operand table in appendix	STR 4	4	RO
843	91	User-defined value 28 name	*String with the designator of the value*	Designator = "0" means that no value is defined for this value number	STR 16	16	RO
843	92	User-defined value 28 measurement value	*Float value*	Float according to IEEE754	FLT	4	RO
843	93	User-defined value 28 unit	*String with max. 4 characters, e.g. "N" or "inch"*	See operand table in appendix	STR 4	4	RO
843	94	User-defined value 29 name	*String with the designator of the value*	Designator = "0" means that no value is defined for this value number	STR 16	16	RO
843	95	User-defined value 29 measurement value	*Float value*	Float according to IEEE754	FLT	4	RO
843	96	User-defined value 29 unit	*String with max. 4 characters, e.g. "N" or "inch"*	See operand table in appendix	STR 4	4	RO

Class	Attribute	Description	Value	Meaning of value	Type	Len	R/W
843	97	User-defined value 30 name	*String with the designator of the value*	Designator = "0" means that no value is defined for this value number	STR 16	16	RO
843	98	User-defined value 30 measurement value	*Float value*	Float according to IEEE754	FLT	4	RO
843	99	User-defined value 30 unit	*String with max. 4 characters, e.g. "N" or "inch"*	See operand table in appendix	STR 4	4	RO

6.2.7 Statistic measurement result evaluation element window 1 (EvElem 1)

Class/attribute data on request

6.2.8 Statistic measurement result evaluation element window 2 (EvElem 2)

Class/attribute data on request

6.2.9 Statistic measurement result evaluation element window 3 (EvElem 3)

Class/attribute data on request

6.2.10 Statistic measurement result evaluation element window 4 (EvElem 4)

Class/attribute data on request

6.2.11 Statistic measurement result evaluation element window 5 (EvElem 5)

Class/attribute data on request

6.2.12 Statistic measurement result evaluation element window 6 (EvElem 6)

Class/attribute data on request

6.2.13 Statistic measurement result evaluation element window 7 (EvElem 7)

Class/attribute data on request

6.2.14 Statistic measurement result evaluation element window 8 (EvElem 8)

Class/attribute data on request

6.2.15 Statistic measurement result evaluation element window 9 (EvElem 9)

Class/attribute data on request

6.2.16 Statistic measurement result evaluation element window 10 (EvElem 10)

Class/attribute data on request

6.2.17 Statistic measurement result evaluation element threshold 1 (EvElem 11)

Class/attribute data on request

6.2.18 Statistic measurement result evaluation element threshold 2 (EvElem 12)

Class/attribute data on request

6.2.19 Statistic measurement result evaluation element threshold 3 (EvElem 13)

Class/attribute data on request

6.2.20 Statistic measurement result evaluation element threshold 4 (EvElem 14)

Class/attribute data on request

6.2.21 Statistic measurement result evaluation element trapezoid window X1 (EvElem 15)

Class/attribute data on request

6.2.22 Statistic measurement result evaluation element trapezoid window X2 (EvElem 16)

Class/attribute data on request

6.2.23 Statistic measurement result evaluation element trapezoid window Y1 (EvElem 17)

Class/attribute data on request

6.2.24 Statistic measurement result evaluation element trapezoid window Y2 (EvElem 18)

Class/attribute data on request

6.2.25 Statistic measurement result evaluation element envelope 1 (EvElem 19)

Class/attribute data on request

6.2.26 Statistic measurement result evaluation element envelope 2 (EvElem 20)

Class/attribute data on request

6.2.27 Statistic measurement result evaluation element mathematical calculation 1 (EvElem 21)

Class/attribute data on request

6.2.28 Statistic measurement result evaluation element mathematical calculation 2 (EvElem 22)

Class/attribute data on request

6.2.29 Statistic measurement result evaluation element mathematical calculation 3 (EvElem 23)

Class/attribute data on request

6.2.30 Statistic measurement result evaluation element mathematical calculation 4 (EvElem 24)

Class/attribute data on request

6.2.31 Statistic measurement result evaluation element mathematical calculation 5 (EvElem 25)

Class/attribute data on request

6.2.32 Statistic measurement result evaluation element mathematical calculation 6 (EvElem 26)

Class/attribute data on request

6.2.33 Read-out X-coordinates of current measurement curve

Sequence to read the curve coordinates

1. Load the curve into the field bus card through a write access to attribute 10.
2. Query the last measured value for the curve (→ end of the curve) through a read access to attribute 10.
3. The curve can now be read out in coordinate groups of up to 200 coordinates each:
   Coordinate group 0: Measured value 0 … 199
   Coordinate group 1: Measured value 200 … 399
   Coordinate group 2: Measured value 400 … 599 … etc.
4. The number of the desired coordinate group is entered through a write access to attribute 19. Since we want to read the beginning of the curve, we enter a 0.

   It is now possible to read curve values no. 0 … 199 (at present we have selected coordinate group 0) at the indices 20 … 219.
5. Coordinate group 1 (values 200 … 399) is now read under attribute 19.
   It is now possible to read curve values no. 200 … 399 at indices 20 … 219.
6. After this, coordinate group 2 (values 400 … 599) is read under attribute 19.
   It is now possible to read curve values no. 400 … 599 at indices 20 … 219, and so forth.
7. The coordinate groups can be read out in any desired sequence.
8. Only curve values that are smaller than or equal to the number of the last measured value (which was read at attribute 10) may be read out.

Class	Attribute	Description	Value	Meaning of value	Type	Len	R/W
870	0	Not possible	-	-		X	X
870	1…9	Reserved	-	-		X	X
870	10	Write access: If a curve is to be read, it must be prepared through a write access before the curve is first read. Read access: Index of the last coordinate; if 0, there is no curve	*EVENT! Writing any two arbitrary bytes initiates action* *Integer value 0…4999*		U16 U16	2 2	W_ R_
870	11…18	Reserved	-	-		X	X
870	19	Write access: Desired group of 200 coordinates. For example, if coordinates 600 … 799 are to be displayed, there must be a 3 here. Query the maximum number	*Integer value 0 … 24*		U16	2	W_

Class	Attribute	Description	Value	Meaning of value	Type	Len	R/W
		of value pairs under class 132/10. Read access: Group of 200 coordinates currently displayed.	*Integer value 0 … 24*		U16	2	R_
870	20	0. coordinate of group of coordinates	*Float value*	Float according to IEEE754	FLT	4	RO
870	21	1. coordinate of group of coordinates	*Float value*	Float according to IEEE754	FLT	4	RO
870	22	2. coordinate of group of coordinates	*Float value*	Float according to IEEE754	FLT	4	RO
870	23	3. coordinate of group of coordinates	*Float value*	Float according to IEEE754	FLT	4	RO
870	…	…	…	…	…	…	…
870	217	197. coordinate of group of coordinates	*Float value*	Float according to IEEE754	FLT	4	RO
870	218	198. coordinate of group of coordinates	*Float value*	Float according to IEEE754	FLT	4	RO
870	219	199. coordinate of group of coordinates	*Float value*	Float according to IEEE754	FLT	4	RO

6.2.34 Read-out Y1-coordinates of current measurement curve

Class	Attribute	Description	Value	Meaning of value	Type	Len	R/W
871	0	Not possible	-	-		X	X
871	1…9	Reserved	-	-		X	X
871	10…	See class 870				X	X

6.2.35 Read-out Y2-coordinates of current measurement curve

Class	Attribute	Description	Value	Meaning of value	Type	Len	R/W
872	0	Not possible	-	-		X	X
872	1…9	Reserved	-	-		X	X
872	10…	See class 870				X	X

6.2.36 Read-out X-coordinates of current pretrigger curve

Class	Attribute	Description	Value	Meaning of value	Type	Len	R/W
873	0	Not possible	-	-		X	X
873	1…9	Reserved	-	-		X	X
873	10	Write access: If a curve is to be read, it must be prepared through a write access before the curve is first read. Read access: Index of the last coordinate; if 0, there is no curve	*EVENT! Writing any two arbitrary bytes initiates action* *Integer value 0…255*		U16 U16	2 2	W_ R_
873	11…18	Reserved	-	-		X	X
873	19	Write access: Desired group of 200 coordinates. For example, if coordinates 600 … 799 are to be displayed, there must be a 3 here. Read access: Group of 200 coordinates currently displayed.	*Integer value 0…1* *Integer value 0…1*		U16 U16	2 2	W_ R_
873	20	0. coordinate of group of coordinates	Float value	Float according to IEEE754	FLT	4	RO
873	21	1. coordinate of group of coordinates	Float value	Float according to IEEE754	FLT	4	RO
873	22	2. coordinate of group of coordinates	Float value	Float according to IEEE754	FLT	4	RO
873	23	3. coordinate of group of coordinates	Float value	Float according to IEEE754	FLT	4	RO
873	…	…	…	…	…	…	…
873	217	197. coordinate of group of coordinates	Float value	Float according to IEEE754	FLT	4	RO

Class	Attribute	Description	Value	Meaning of value	Type	Len	R/W
873	218	198. coordinate of group of coordinates	Float value	Float according to IEEE754	FLT	4	RO
873	219	199. coordinate of group of coordinates	Float value	Float according to IEEE754	FLT	4	RO

6.2.37 Read-out Y1-coordinates of current pretrigger curve

Class	Attribute	Description	Value	Meaning of value	Type	Len	R/W
874	0	Not possible	-	-		X	X
874	1…9	Reserved	-	-		X	X
874	10…	See class 873				X	X

6.2.38 Read-out Y2-coordinates of current pretrigger curve

Class	Attribute	Description	Value	Meaning of value	Type	Len	R/W
875	0	Not possible	-	-		X	X
875	1…9	Reserved	-	-		X	X
875	10…	See class 873				X	X

6.2.39 Evaluation results window 1

Class	Attribute	Description	Value	Meaning of value	Type	Len	R/W
876	0	Not possible	-	-		X	X
876	1…9	Reserved	-	-		X	X
876	10	Window 1 evaluation results OK/NOK	*0* *1*	NOK OK	U16	2	RO
876	11	Window 1 NOK counter	*32bit-Integer value >= 0*		U32	4	RO
876	12	Window 1 entry of curve X-coordinate	*Float value*	Float according to IEEE754	FLT	4	RO
876	13	Window 1 entry of curve Y-coordinate	*Float value*	Float according to IEEE754	FLT	4	RO
876	14	Window 1 exit of curve X-coordinate	*Float value*	Float according to IEEE754	FLT	4	RO
876	15	Window 1 exit of curve Y-coordinate	*Float value*	Float according to IEEE754	FLT	4	RO

Class	Attribute	Description	Value	Meaning of value	Type	Len	R/W
876	16	Window 1 absolute Y-maximum in window X-coordinate	*Float value*	Float according to IEEE754	FLT	4	RO
876	17	Window 1 absolute Y-maximum in window Y-coordinate	*Float value*	Float according to IEEE754	FLT	4	RO
876	18	Window 1 absolute Y-minimum in window X-coordinate	*Float value*	Float according to IEEE754	FLT	4	RO
876	19	Window 1 absolute Y-minimum in window Y-coordinate	*Float value*	Float according to IEEE754	FLT	4	RO
876	20	Window 1 local Y-maximum in window X-coordinate	*Float value*	Float according to IEEE754	FLT	4	RO
876	21	Window 1 local Y-maximum in window Y-coordinate	*Float value*	Float according to IEEE754	FLT	4	RO
876	22	Window 1 local Y-minimum in window X-coordinate	*Float value*	Float according to IEEE754	FLT	4	RO
876	23	Window 1 local Y-minimum in window Y-coordinate	*Float value*	Float according to IEEE754	FLT	4	RO
876	24	Window 1 bend X-coordinate	*Float value*	Float according to IEEE754	FLT	4	RO
876	25	Window 1 bend Y-coordinate	*Float value*	Float according to IEEE754	FLT	4	RO
876	26	Window 1 gradient value	*Float value*	Float according to IEEE754	FLT	4	RO
876	27	Window 1 Y-mean value	*Float value*	Float according to IEEE754	FLT	4	RO
876	28	Window 1 area below curve	*Float value*	Float according to IEEE754	FLT	4	RO

6.2.40 Evaluation results window 2

Class	Attribute	Description	Value	Meaning of value	Type	Len	R/W
877	0	Not possible	-	-		X	X
877	1…9	Reserved	-	-		X	X
877	10…	See class 876				X	X

6.2.41 Evaluation results window 3

Class	Attribute	Description	Value	Meaning of value	Type	Len	R/W
878	0	Not possible	-	-		X	X
878	1…9	Reserved	-	-		X	X
878	10…	See class 876				X	X

6.2.42 Evaluation results window 4

Class	Attribute	Description	Value	Meaning of value	Type	Len	R/W
879	0	Not possible	-	-		X	X
879	1…9	Reserved	-	-		X	X
879	10…	See class 876				X	X

6.2.43 Evaluation results window 5

Class	Attribute	Description	Value	Meaning of value	Type	Len	R/W
880	0	Not possible	-	-		X	X
880	1…9	Reserved	-	-		X	X
880	10…	See class 876				X	X

6.2.44 Evaluation results window 6

Class	Attribute	Description	Value	Meaning of value	Type	Len	R/W
881	0	Not possible	-	-		X	X
881	1…9	Reserved	-	-		X	X
881	10…	See class 876				X	X

6.2.45 Evaluation results window 7

Class	Attribute	Description	Value	Meaning of value	Type	Len	R/W
882	0	Not possible	-	-		X	X
882	1…9	Reserved	-	-		X	X
882	10…	See class 876				X	X

6.2.46 Evaluation results window 8

Class	Attribute	Description	Value	Meaning of value	Type	Len	R/W
883	0	Not possible	-	-		X	X
883	1…9	Reserved	-	-		X	X
883	10…	See class 876				X	X

6.2.47 Evaluation results window 9

Class	Attribute	Description	Value	Meaning of value	Type	Len	R/W
884	0	Not possible	-	-		X	X
884	1…9	Reserved	-	-		X	X
884	10…	See class 876				X	X

6.2.48 Evaluation results window 10

Class	Attribute	Description	Value	Meaning of value	Type	Len	R/W
885	0	Not possible	-	-		X	X
885	1…9	Reserved	-	-		X	X
885	10…	See class 876				X	X

6.2.49 Evaluation results threshold 1

Class	Attribute	Description	Value	Meaning of value	Type	Len	R/W
886	0	Not possible	-	-		X	X
886	1…9	Reserved	-	-		X	X
886	10	Threshold 1 evaluation result OK/NOK	*0* *1*	NOK OK	U16	2	RO
886	11	Threshold 1 NOK counter	*32bit-Integer value >= 0*		U32	4	RO

Class	Attribute	Description	Value	Meaning of value	Type	Len	R/W
886	12	Threshold intersection point 1 X-coordinate	*Float value*	Float according to IEEE754	FLT	4	RO
886	13	Threshold intersection point 1 Y-coordinate	*Float value*	Float according to IEEE754	FLT	4	RO
886	14	Threshold 1 absolute Y-maximum in threshold X-coordinate	*Float value*	Float according to IEEE754	FLT	4	RO
886	15	Threshold 1 absolute Y-maximum in threshold Y-coordinate	*Float value*	Float according to IEEE754	FLT	4	RO
886	16	Threshold 1 absolute Y-minimum in threshold X-coordinate	*Float value*	Float according to IEEE754	FLT	4	RO
886	17	Threshold 1 absolute Y-minimum in threshold Y-coordinate	*Float value*	Float according to IEEE754	FLT	4	RO
886	18	Threshold 1 local Y-maximum in threshold X-coordinate	*Float value*	Float according to IEEE754	FLT	4	RO
886	19	Threshold 1 local Y-maximum in threshold Y-coordinate	*Float value*	Float according to IEEE754	FLT	4	RO
886	20	Threshold 1 local Y-minimum in threshold X-coordinate	*Float value*	Float according to IEEE754	FLT	4	RO
886	21	Threshold 1 local Y-minimum in threshold Y-coordinate	*Float value*	Float according to IEEE754	FLT	4	RO
886	22	Threshold 1 bend X-coordinate	*Float value*	Float according to IEEE754	FLT	4	RO
886	23	Threshold 1 bend Y-coordinate	*Float value*	Float according to IEEE754	FLT	4	RO
886	24	Threshold 1 gradient value	*Float value*	Float according to IEEE754	FLT	4	RO
886	25	Threshold 1 Y-mean value	*Float value*	Float according to IEEE754	FLT	4	RO

Class	Attribute	Description	Value	Meaning of value	Type	Len	R/W
886	26	Threshold 1 area below curve	*Float value*	Float according to IEEE754	FLT	4	RO

6.2.50 Evaluation results threshold 2

Class	Attribute	Description	Value	Meaning of value	Type	Len	R/W
887	0	Not possible	-	-		X	X
887	1…9	Reserved	-	-		X	X
887	10…	See class 886				X	X

6.2.51 Evaluation results threshold 3

Class	Attribute	Description	Value	Meaning of value	Type	Len	R/W
888	0	Not possible	-	-		X	X
888	1…9	Reserved	-	-		X	X
888	10…	See class 886				X	X

6.2.52 Evaluation results threshold 4

Class	Attribute	Description	Value	Meaning of value	Type	Len	R/W
889	0	Not possible	-	-		X	X
889	1…9	Reserved	-	-		X	X
889	10…	See class 886				X	X

6.2.53 Evaluation results trapezoid window X1

Class	Attribute	Description	Value	Meaning of value	Type	Len	R/W
890	0	Not possible	-	-		X	X
890	1…9	Reserved	-	-		X	X
890	10	Trapezoid X 1 evaluation result OK/NOK	*0* *1*	NOK OK	U16	2	RO
890	11	Trapezoid X 1 NOK counter	*32bit-Integer value >= 0*		U32	4	RO
890	12	Trapezoid X 1 entry coordinate X-coordinate	*Float value*	Float according to IEEE754	FLT	4	RO
890	13	Trapezoid X 1 entry coordinate Y-coordinate	*Float value*	Float according to IEEE754	FLT	4	RO
890	14	Trapezoid X 1 exit coordinate X-coordinate	*Float value*	Float according to IEEE754	FLT	4	RO
890	15	Trapezoid X 1 exit coordinate Y-coordinate	*Float value*	Float according to IEEE754	FLT	4	RO

6.2.54 Evaluation results trapezoid window X2

Class	Attribute	Description	Value	Meaning of value	Type	Len	R/W
891	0	Not possible	-	-		X	X
891	1…9	Reserved	-	-		X	X
891	10…	See class 890				X	X

6.2.55 Evaluation results trapezoid window Y1

Class	Attribute	Description	Value	Meaning of value	Type	Len	R/W
892	0	Not possible	-	-		X	154
892	1…9	Reserved	-	-		X	154
892	10	Trapezoid Y1 evaluation results OK/NOK	*0* *1*	NOK OK	U16	2	154
892	11	Trapezoid Y1 NOK counter	*32bit-Integer value >= 0*		U32	4	154
892	12	Trapezoid Y1 entry coordinate X-coordinate	*Float value*	Float according to IEEE754	FLT	4	RO
892	13	Trapezoid Y1 entry coordinate Y-coordinate	*Float value*	Float according to IEEE754	FLT	4	RO

Class	Attribute	Description	Value	Meaning of value	Type	Len	R/W
892	14	Trapezoid Y1 exit coordinate X-coordinate	*Float value*	Float according to IEEE754	FLT	4	RO
892	15	Trapezoid Y1 exit coordinate Y-coordinate	*Float value*	Float according to IEEE754	FLT	4	RO

6.2.56 Evaluation results trapezoid window Y2

Class	Attribute	Description	Value	Meaning of value	Type	Len	R/W
893	0	Not possible	-	-		X	X
893	1…9	Reserved	-	-		X	X
893	10…	See class 892				X	X

6.2.57 Evaluation results envelope 1

Class	Attribute	Description	Value	Meaning of value	Type	Len	R/W
894	0	Not possible	-	-		X	X
894	1…9	Reserved	-	-		X	X
894	10	Envelope 1 evaluation result OK/NOK	*0* *1*	NOK OK	U16	2	RO
894	11	Envelope 1 NOK counter	*32bit-Integer value >= 0*		U32	4	RO
894	12	Envelope 1 entry coordinate X-coordinate	*Float value*	Float according to IEEE754	FLT	4	RO
894	13	Envelope 1 entry coordinate Y-coordinate	*Float value*	Float according to IEEE754	FLT	4	RO
894	14	Envelope 1 exit coordinate X-coordinate	*Float value*	Float according to IEEE754	FLT	4	RO
894	15	Envelope 1 exit coordinate Y-coordinate	*Float value*	Float according to IEEE754	FLT	4	RO

6.2.58 Evaluation results envelope 2

Class	Attribute	Description	Value	Meaning of value	Type	Len	R/W
895	0	Not possible	-	-		X	X
895	1…9	Reserved	-	-		X	X
895	10…	See class 894				X	X

6.2.59 Evaluation results rotary switch evaluation element 1

Class	Attribute	Description	Value	Meaning of value	Type	Len	R/W
896	0	Not possible	-	-		X	X
896	1…9	Reserved	-	-		X	X
896	10	Rotary switch evaluation element 1 quantity minima	*0…32*		U16	2	RO
896	11	Rotary switch evaluation element 1 quantity maxima	*0…32*		U16	2	RO
896	12	Rotary switch evaluation element 1 mean value minima	*Float value*	Float according to IEEE754	FLT	4	RO
896	13	Rotary switch evaluation element 1 mean value maxima	*Float value*	Float according to IEEE754	FLT	4	RO
896	14	Rotary switch evaluation element 1 Max. Y-Diff. minima	*Float value*	Float according to IEEE754	FLT	4	RO
896	15	Rotary switch evaluation element 1 Max. Y-Diff. maxima	*Float value*	Float according to IEEE754	FLT	4	RO
896	16	Rotary switch evaluation element 1 evaluation result	*0* *1*	NOK OK	U16	2	RO
896	17	Rotary switch evaluation element 1 X-coord. minima 1	*Float value*	Float according to IEEE754	FLT	4	RO
896	18	Rotary switch evaluation element 1 X-coord. minima 2	*Float value*	Float according to IEEE754	FLT	4	RO
896	19	Rotary switch evaluation element 1 X-coord. minima 3	*Float value*	Float according to IEEE754	FLT	4	RO
896	20	Rotary switch evaluation element 1 X-coord. minima 4	*Float value*	Float according to IEEE754	FLT	4	RO

Class	Attribute	Description	Value	Meaning of value	Type	Len	R/W
896	21	Rotary switch evaluation element 1 X-coord. minima 5	*Float value*	Float according to IEEE754	FLT	4	RO
896	22	Rotary switch evaluation element 1 X-coord. minima 6	*Float value*	Float according to IEEE754	FLT	4	RO
896	23	Rotary switch evaluation element 1 X-coord. minima 7	*Float value*	Float according to IEEE754	FLT	4	RO
896	24	Rotary switch evaluation element 1 X-coord. minima 8	*Float value*	Float according to IEEE754	FLT	4	RO
896	25	Rotary switch evaluation element 1 X-coord. minima 9	*Float value*	Float according to IEEE754	FLT	4	RO
896	26	Rotary switch evaluation element 1 X-coord. minima 10	*Float value*	Float according to IEEE754	FLT	4	RO
896	27	Rotary switch evaluation element 1 X-coord. minima 11	*Float value*	Float according to IEEE754	FLT	4	RO
896	28	Rotary switch evaluation element 1 X-coord. minima 12	*Float value*	Float according to IEEE754	FLT	4	RO
896	29	Rotary switch evaluation element 1 X-coord. minima 13	*Float value*	Float according to IEEE754	FLT	4	RO
896	30	Rotary switch evaluation element 1 X-coord. minima 14	*Float value*	Float according to IEEE754	FLT	4	RO
896	31	Rotary switch evaluation element 1 X-coord. minima 15	*Float value*	Float according to IEEE754	FLT	4	RO

Class	Attribute	Description	Value	Meaning of value	Type	Len	R/W
896	32	Rotary switch evaluation element 1 X-coord. minima 16	*Float value*	Float according to IEEE754	FLT	4	RO
896	33	Rotary switch evaluation element 1 X-coord. minima 17	*Float value*	Float according to IEEE754	FLT	4	RO
896	34	Rotary switch evaluation element 1 X-coord. minima 18	*Float value*	Float according to IEEE754	FLT	4	RO
896	35	Rotary switch evaluation element 1 X-coord. minima 19	*Float value*	Float according to IEEE754	FLT	4	RO
896	36	Rotary switch evaluation element 1 X-coord. minima 20	*Float value*	Float according to IEEE754	FLT	4	RO
896	37	Rotary switch evaluation element 1 X-coord. minima 21	*Float value*	Float according to IEEE754	FLT	4	RO
896	38	Rotary switch evaluation element 1 X-coord. minima 22	*Float value*	Float according to IEEE754	FLT	4	RO
896	39	Rotary switch evaluation element 1 X-coord. minima 23	*Float value*	Float according to IEEE754	FLT	4	RO
896	40	Rotary switch evaluation element 1 X-coord. minima 24	*Float value*	Float according to IEEE754	FLT	4	RO
896	41	Rotary switch evaluation element 1 X-coord. minima 25	*Float value*	Float according to IEEE754	FLT	4	RO

Class	Attribute	Description	Value	Meaning of value	Type	Len	R/W
896	42	Rotary switch evaluation element 1 X-coord. minima 26	*Float value*	Float according to IEEE754	FLT	4	RO
896	43	Rotary switch evaluation element 1 X-coord. minima 27	*Float value*	Float according to IEEE754	FLT	4	RO
896	44	Rotary switch evaluation element 1 X-coord. minima 28	*Float value*	Float according to IEEE754	FLT	4	RO
896	45	Rotary switch evaluation element 1 X-coord. minima 29	*Float value*	Float according to IEEE754	FLT	4	RO
896	46	Rotary switch evaluation element 1 X-coord. minima 30	*Float value*	Float according to IEEE754	FLT	4	RO
896	47	Rotary switch evaluation element 1 X-coord. minima 31	*Float value*	Float according to IEEE754	FLT	4	RO
896	48	Rotary switch evaluation element 1 X-coord. minima 32	*Float value*	Float according to IEEE754	FLT	4	RO
896	49	Rotary switch evaluation element 1 Y-coord. minima 1	*Float value*	Float according to IEEE754	FLT	4	RO
896	50	Rotary switch evaluation element 1 Y-coord. minima 2	*Float value*	Float according to IEEE754	FLT	4	RO
896	51	Rotary switch evaluation element 1 Y-coord. minima 3	*Float value*	Float according to IEEE754	FLT	4	RO
896	52	Rotary switch evaluation element 1 Y-coord. minima 4	*Float value*	Float according to IEEE754	FLT	4	RO

Class	Attribute	Description	Value	Meaning of value	Type	Len	R/W
896	53	Rotary switch evaluation element 1 Y-coord. minima 5	*Float value*	Float according to IEEE754	FLT	4	RO
896	54	Rotary switch evaluation element 1 Y-coord. minima 6	*Float value*	Float according to IEEE754	FLT	4	RO
896	55	Rotary switch evaluation element 1 Y-coord. minima 7	*Float value*	Float according to IEEE754	FLT	4	RO
896	56	Rotary switch evaluation element 1 Y-coord. minima 8	*Float value*	Float according to IEEE754	FLT	4	RO
896	57	Rotary switch evaluation element 1 Y-coord. minima 9	*Float value*	Float according to IEEE754	FLT	4	RO
896	58	Rotary switch evaluation element 1 Y-coord. minima 10	*Float value*	Float according to IEEE754	FLT	4	RO
896	59	Rotary switch evaluation element 1 Y-coord. minima 11	*Float value*	Float according to IEEE754	FLT	4	RO
896	60	Rotary switch evaluation element 1 Y-coord. minima 12	*Float value*	Float according to IEEE754	FLT	4	RO
896	61	Rotary switch evaluation element 1 Y-coord. minima 13	*Float value*	Float according to IEEE754	FLT	4	RO
896	62	Rotary switch evaluation element 1 Y-coord. minima 14	*Float value*	Float according to IEEE754	FLT	4	RO
896	63	Rotary switch evaluation element 1 Y-coord. minima 15	*Float value*	Float according to IEEE754	FLT	4	RO

Class	Attribute	Description	Value	Meaning of value	Type	Len	R/W
896	64	Rotary switch evaluation element 1 Y-coord. minima 16	*Float value*	Float according to IEEE754	FLT	4	RO
896	65	Rotary switch evaluation element 1 Y-coord. minima 17	*Float value*	Float according to IEEE754	FLT	4	RO
896	66	Rotary switch evaluation element 1 Y-coord. minima 18	*Float value*	Float according to IEEE754	FLT	4	RO
896	67	Rotary switch evaluation element 1 Y-coord. minima 19	*Float value*	Float according to IEEE754	FLT	4	RO
896	68	Rotary switch evaluation element 1 Y-coord. minima 20	*Float value*	Float according to IEEE754	FLT	4	RO
896	69	Rotary switch evaluation element 1 Y-coord. minima 21	*Float value*	Float according to IEEE754	FLT	4	RO
896	70	Rotary switch evaluation element 1 Y-coord. minima 22	*Float value*	Float according to IEEE754	FLT	4	RO
896	71	Rotary switch evaluation element 1 Y-coord. minima 23	*Float value*	Float according to IEEE754	FLT	4	RO
896	72	Rotary switch evaluation element 1 Y-coord. minima 24	*Float value*	Float according to IEEE754	FLT	4	RO
896	73	Rotary switch evaluation element 1 Y-coord. minima 25	*Float value*	Float according to IEEE754	FLT	4	RO

Class	Attribute	Description	Value	Meaning of value	Type	Len	R/W
896	74	Rotary switch evaluation element 1 Y-coord. minima 26	*Float value*	Float according to IEEE754	FLT	4	RO
896	75	Rotary switch evaluation element 1 Y-coord. minima 27	*Float value*	Float according to IEEE754	FLT	4	RO
896	76	Rotary switch evaluation element 1 Y-coord. minima 28	*Float value*	Float according to IEEE754	FLT	4	RO
896	77	Rotary switch evaluation element 1 Y-coord. minima 29	*Float value*	Float according to IEEE754	FLT	4	RO
896	78	Rotary switch evaluation element 1 Y-coord. minima 30	*Float value*	Float according to IEEE754	FLT	4	RO
896	79	Rotary switch evaluation element 1 Y-coord. minima 31	*Float value*	Float according to IEEE754	FLT	4	RO
896	80	Rotary switch evaluation element 1 Y-coord. minima 32	*Float value*	Float according to IEEE754	FLT	4	RO
896	81	Rotary switch evaluation element 1 X-coord. maxima 1	*Float value*	Float according to IEEE754	FLT	4	RO
896	82	Rotary switch evaluation element 1 X-coord. maxima 2	*Float value*	Float according to IEEE754	FLT	4	RO
896	83	Rotary switch evaluation element 1 X-coord. maxima 3	*Float value*	Float according to IEEE754	FLT	4	RO

Class	Attribute	Description	Value	Meaning of value	Type	Len	R/W
896	84	Rotary switch evaluation element 1 X-coord. maxima 4	*Float value*	Float according to IEEE754	FLT	4	RO
896	85	Rotary switch evaluation element 1 X-coord. maxima 5	*Float value*	Float according to IEEE754	FLT	4	RO
896	86	Rotary switch evaluation element 1 X-coord. maxima 6	*Float value*	Float according to IEEE754	FLT	4	RO
896	87	Rotary switch evaluation element 1 X-coord. maxima 7	*Float value*	Float according to IEEE754	FLT	4	RO
896	88	Rotary switch evaluation element 1 X-coord. maxima 8	*Float value*	Float according to IEEE754	FLT	4	RO
896	89	Rotary switch evaluation element 1 X-coord. maxima 9	*Float value*	Float according to IEEE754	FLT	4	RO
896	90	Rotary switch evaluation element 1 X-coord. maxima 10	*Float value*	Float according to IEEE754	FLT	4	RO
896	91	Rotary switch evaluation element 1 X-coord. maxima 11	*Float value*	Float according to IEEE754	FLT	4	RO
896	92	Rotary switch evaluation element 1 X-coord. maxima 12	*Float value*	Float according to IEEE754	FLT	4	RO
896	93	Rotary switch evaluation element 1 X-coord. maxima 13	*Float value*	Float according to IEEE754	FLT	4	RO

Class	Attribute	Description	Value	Meaning of value	Type	Len	R/W
896	94	Rotary switch evaluation element 1 X-coord. maxima 14	*Float value*	Float according to IEEE754	FLT	4	RO
896	95	Rotary switch evaluation element 1 X-coord. maxima 15	*Float value*	Float according to IEEE754	FLT	4	RO
896	96	Rotary switch evaluation element 1 X-coord. maxima 16	*Float value*	Float according to IEEE754	FLT	4	RO
896	97	Rotary switch evaluation element 1 X-coord. maxima 17	*Float value*	Float according to IEEE754	FLT	4	RO
896	98	Rotary switch evaluation element 1 X-coord. maxima 18	*Float value*	Float according to IEEE754	FLT	4	RO
896	99	Rotary switch evaluation element 1 X-coord. maxima 19	*Float value*	Float according to IEEE754	FLT	4	RO
896	100	Rotary switch evaluation element 1 X-coord. maxima 20	*Float value*	Float according to IEEE754	FLT	4	RO
896	101	Rotary switch evaluation element 1 X-coord. maxima 21	*Float value*	Float according to IEEE754	FLT	4	RO
896	102	Rotary switch evaluation element 1 X-coord. maxima 22	*Float value*	Float according to IEEE754	FLT	4	RO
896	103	Rotary switch evaluation element 1 X-coord. maxima 23	*Float value*	Float according to IEEE754	FLT	4	RO

Class	Attribute	Description	Value	Meaning of value	Type	Len	R/W
896	104	Rotary switch evaluation element 1 X-coord. maxima 24	*Float value*	Float according to IEEE754	FLT	4	RO
896	105	Rotary switch evaluation element 1 X-coord. maxima 25	*Float value*	Float according to IEEE754	FLT	4	RO
896	106	Rotary switch evaluation element 1 X-coord. maxima 26	*Float value*	Float according to IEEE754	FLT	4	RO
896	107	Rotary switch evaluation element 1 X-coord. maxima 27	*Float value*	Float according to IEEE754	FLT	4	RO
896	108	Rotary switch evaluation element 1 X-coord. maxima 28	*Float value*	Float according to IEEE754	FLT	4	RO
896	109	Rotary switch evaluation element 1 X-coord. maxima 29	*Float value*	Float according to IEEE754	FLT	4	RO
896	110	Rotary switch evaluation element 1 X-coord. maxima 30	*Float value*	Float according to IEEE754	FLT	4	RO
896	111	Rotary switch evaluation element 1 X-coord. maxima 31	*Float value*	Float according to IEEE754	FLT	4	RO
896	112	Rotary switch evaluation element 1 X-coord. maxima 32	*Float value*	Float according to IEEE754	FLT	4	RO

Class	Attribute	Description	Value	Meaning of value	Type	Len	R/W
896	113	Rotary switch evaluation element 1 Y-coord. maxima 1	*Float value*	Float according to IEEE754	FLT	4	RO
896	114	Rotary switch evaluation element 1 Y-coord. maxima 2	*Float value*	Float according to IEEE754	FLT	4	RO
896	115	Rotary switch evaluation element 1 Y-coord. maxima 3	*Float value*	Float according to IEEE754	FLT	4	RO
896	116	Rotary switch evaluation element 1 Y-coord. maxima 4	*Float value*	Float according to IEEE754	FLT	4	RO
896	117	Rotary switch evaluation element 1 Y-coord. maxima 5	*Float value*	Float according to IEEE754	FLT	4	RO
896	118	Rotary switch evaluation element 1 Y-coord. maxima 6	*Float value*	Float according to IEEE754	FLT	4	RO
896	119	Rotary switch evaluation element 1 Y-coord. maxima 7	*Float value*	Float according to IEEE754	FLT	4	RO
896	120	Rotary switch evaluation element 1 Y-coord. maxima 8	*Float value*	Float according to IEEE754	FLT	4	RO
896	121	Rotary switch evaluation element 1 Y-coord. maxima 9	*Float value*	Float according to IEEE754	FLT	4	RO

Class	Attribute	Description	Value	Meaning of value	Type	Len	R/W
896	122	Rotary switch evaluation element 1 Y-coord. maxima 10	*Float value*	Float according to IEEE754	FLT	4	RO
896	123	Rotary switch evaluation element 1 Y-coord. maxima 11	*Float value*	Float according to IEEE754	FLT	4	RO
896	124	Rotary switch evaluation element 1 Y-coord. maxima 12	*Float value*	Float according to IEEE754	FLT	4	RO
896	125	Rotary switch evaluation element 1 Y-coord. maxima 13	*Float value*	Float according to IEEE754	FLT	4	RO
896	126	Rotary switch evaluation element 1 Y-coord. maxima 14	*Float value*	Float according to IEEE754	FLT	4	RO
896	127	Rotary switch evaluation element 1 Y-coord. maxima 15	*Float value*	Float according to IEEE754	FLT	4	RO
896	128	Rotary switch evaluation element 1 Y-coord. maxima 16	*Float value*	Float according to IEEE754	FLT	4	RO
896	129	Rotary switch evaluation element 1 Y-coord. maxima 17	*Float value*	Float according to IEEE754	FLT	4	RO
896	130	Rotary switch evaluation element 1 Y-coord. maxima 18	*Float value*	Float according to IEEE754	FLT	4	RO

Class	Attribute	Description	Value	Meaning of value	Type	Len	R/W
896	131	Rotary switch evaluation element 1 Y-coord. maxima 19	*Float value*	Float according to IEEE754	FLT	4	RO
896	132	Rotary switch evaluation element 1 Y-coord. maxima 20	*Float value*	Float according to IEEE754	FLT	4	RO
896	133	Rotary switch evaluation element 1 Y-coord. maxima 21	*Float value*	Float according to IEEE754	FLT	4	RO
896	134	Rotary switch evaluation element 1 Y-coord. maxima 22	*Float value*	Float according to IEEE754	FLT	4	RO
896	135	Rotary switch evaluation element 1 Y-coord. maxima 23	*Float value*	Float according to IEEE754	FLT	4	RO
896	136	Rotary switch evaluation element 1 Y-coord. maxima 24	*Float value*	Float according to IEEE754	FLT	4	RO
896	137	Rotary switch evaluation element 1 Y-coord. maxima 25	*Float value*	Float according to IEEE754	FLT	4	RO
896	138	Rotary switch evaluation element 1 Y-coord. maxima 26	*Float value*	Float according to IEEE754	FLT	4	RO
896	139	Rotary switch evaluation element 1 Y-coord. maxima 27	*Float value*	Float according to IEEE754	FLT	4	RO

Class	Attribute	Description	Value	Meaning of value	Type	Len	R/W
896	140	Rotary switch evaluation element 1 Y-coord. maxima 28	*Float value*	Float according to IEEE754	FLT	4	RO
896	141	Rotary switch evaluation element 1 Y-coord. maxima 29	*Float value*	Float according to IEEE754	FLT	4	RO
896	142	Rotary switch evaluation element 1 Y-coord. maxima 30	*Float value*	Float according to IEEE754	FLT	4	RO
896	143	Rotary switch evaluation element 1 Y-coord. maxima 31	*Float value*	Float according to IEEE754	FLT	4	RO
896	144	Rotary switch evaluation element 1 Y-coord. maxima 32	*Float value*	Float according to IEEE754	FLT	4	RO

6.2.60 Evaluation results rotary switch evaluation element 2

Class	Attribute	Description	Value	Meaning of value	Type	Len	R/W
897	0	Not possible	-	-		X	X
897	1…9	Reserved	-	-		X	X
897	10…	See class 896				X	X

6.2.61 Evaluation results mathematical functions

Class	Attribute	Description	Value	Meaning of value	Type	Len	R/W
898	0	Not possible	-	-		X	X
898	1…9	Reserved	-	-		X	X
898	10	Math. functions evaluation result line 1	*0* *1*	NOK OK	U16	2	RO
898	11	Math. functions evaluation result line 2	*0* *1*	NOK OK	U16	2	RO

Class	Attribute	Description	Value	Meaning of value	Type	Len	R/W
898	12	Math. functions evaluation result line 3	*0* *1*	NOK OK	U16	2	RO
898	13	Math. functions evaluation result line 4	*0* *1*	NOK OK	U16	2	RO
898	14	Math. functions evaluation result line 5	*0* *1*	NOK OK	U16	2	RO
898	15	Math. functions evaluation result line 6	*0* *1*	NOK OK	U16	2	RO
898	16	Math. functions NOK counter line 1	*32bit-Integer value >= 0*		U32	4	RO
898	17	Math. functions NOK counter line 2	*32bit-Integer value >= 0*		U32	4	RO
898	18	Math. functions NOK counter line 3	*32bit-Integer value >= 0*		U32	4	RO
898	19	Math. functions NOK counter line 4	*32bit-Integer value >= 0*		U32	4	RO
898	20	Math. functions NOK counter line 5	*32bit-Integer value >= 0*		U32	4	RO
898	21	Math. functions NOK counter line 6	*32bit-Integer value >= 0*		U32	4	RO

6.2.62 Combined results (common curve data and evalution elements)

Class	Attribute	Description	Value	Meaning of value	Type	Len	R/W
899	0	Not possible	-			X	X
899	1…9	Reserved	-			X	X
899	10	Combined results: general curve data Y1	*The data is bit coded and transmitted as STRUCT.* X-minimum, X-coord. (FL) X-minimum, Y1-coord. (FL) X-maximum, X-coord. (FL) X-maximum, Y1-coord. (FL) Y1-minimum, X-coord. (FL) Y1-minimum, Y1-coord.(FL) Y1-maximum, X-coord. (FL) Y1-maximum, Y1-coord.(FL) First value X-coord. (FL) First value Y1-coord. (FL) Last value X-coord. (FL) Last value Y1-coord. (FL) Return point X-coord. (FL) Return point Y1-coord. (FL)		STRUCT OF FLOATS	56	RO
899	11	Combined results: general curve data Y2	See attribute 10		STRUCT OF FLOATS	56	RO
899	12	Combined results: window 1	*The data is bit coded and transmitted as STRUCT.* Evaluation result (UINT32) Entry X-coordinate (FL) Entry Y-coordinate (FL) Exit X-coordinate (FL) Exit Y-coordinate (FL) Absolute Ymax X-coord. (FL) Absolute Ymax Y- coord.(FL) Absolute Ymin X- coord. (FL) Absolute Ymin Y- coord. (FL) Local Ymax X-coord. (FL) Local Ymax Y-coord. (FL) Local Ymin X-coord. (FL) Local Ymin Y-coord. (FL) Bending point X-coord. (FL) Bending point Y-coord. (FL) Mean value Y (FL) Gradient (FL) Area (FL) Window Xmin coord. (FL) Window Xmax coord. (FL) Window Ymin coord. (FL) Window Ymax coord. (FL)		STRUCT		

Class	Attribute	Description	Value	Meaning of value	Type	Len	R/W
899	13	Combined results: window 2	*See attribute 12*		STRUCT	88	RO
899	14	Combined results: window 3	*See attribute 12*		STRUCT	88	RO
899	15	Combined results: window 4	*See attribute 12*		STRUCT	88	RO
899	16	Combined results: window 5	*See attribute 12*		STRUCT	88	RO
899	17	Combined results: window 6	*See attribute 12*		STRUCT	88	RO
899	18	Combined results: window 7	*See attribute 12*		STRUCT	88	RO
899	20	Combined results: window 9	See attribute 12		STRUCT	88	RO
899	21	Combined results: window 10	See attribute 12		STRUCT	88	RO
899	22	Combined results: threshold 1	*The data is bit coded and transmitted as STRUCT:* Evaluation result (UINT16) Threashold type (UINT16) Threshold pass X (FL) Threshold pass Y (FL) Absolute Ymax X-coord. (FL) Absolute Ymax Y- coord. (FL) Absolute Ymin X- coord. (FL) Absolute Ymin Y- coord. (FL) Local Ymax X-coord. (FL) Local Ymax Y-coord. (FL) Local Ymin X-coord. (FL) Local Ymin Y-coord. (FL) Bending point X-coord. (FL) Bending point Y-coord. (FL) Mean value Y (FL) Gradient (FL) Area (FL) Threshold position (FL) Threshold min coord. (FL) Threshold max coord. (FL)		STRUCT	76	RO
899	23	Combined results: threshold 2	See attribute 22		STRUCT	76	RO
899	24	Combined results: threshold 3	See attribute 22		STRUCT	76	RO

Class	Attribute	Description	Value	Meaning of value	Type	Len	R/W
899	25	Combined results: threshold 4	See attribute 22		STRUCT	76	RO
899	26	Combined results: trapezoid window X1	*The data is bit coded and transmitted as STRUCT:* Evaluation result (UINT32) Entry X-coord. (FL) Entry Y-coord. (FL) Exit X-coord. (FL) Exit Y-coord. (FL) Xmin (FL) Xmax (FL) Ymax left (FL) Ymax right (FL) Ymin left (FL) Ymin right (FL)		STRUCT	44	RO
899	27	Combined results: trapezoid window X2	*See attribute 26*		STRUCT	44	RO
899	28	Combined results: trapezoid window Y1	*The data is bit coded and transmitted as STRUCT:* Evaluation result (UINT32) Entry X-coord. (FL) Entry Y-coord. (FL) Exit X-coord. (FL) Exit Y-coord. (FL) Ymin (FL) Ymax (FL) Xmin top (FL) Xmax top (FL) Xmin bottom (FL) Xmax bottom (FL)		STRUCT	44	RO
899	29	Combined results: trapezoid window Y2	*See attribute 28*		STRUCT	44	RO
899	30	Combined results: envelope 1	*The data is bit coded and transmitted as STRUCT:* Evaluation result (UINT32) Entry X-coordinate (FL) Entry Y-coordinate (FL) Exit X-coordinate (FL) Exit Y-coordinate (FL) Envelope 1 start (FL) Envelope 1 end (FL) Delta min (FL) Delta max (FL)		STRUCT	36	RO
899	31	Combined results: envelope 2	*See attribute 30*		STRUCT	36	RO

7 Appendix

7.1 Operand table for mathematical functions

Number	ID of operant
0	OFF
100	Intermediate Result 1
101	Intermediate Result 2
102	Intermediate Result 3
103	Intermediate Result 4
104	Intermediate Result 5
105	Intermediate Result 6
106	Intermediate Result 7
107	Intermediate Result 8
108	Intermediate Result 9
109	Intermediate Result 10
200	Constant 1
201	Constant 2
202	Constant 3
203	Constant 4
204	Constant 5
205	Constant 6
206	Constant 7
207	Constant 8
208	Constant 9
209	Constant 10
300	General curve data Y1 – Start X
301	General curve data Y1 – Start Y
302	General curve data Y1 – End X

Number	ID of operant
303	General curve data Y1 – End Y
304	General curve data Y1 – Abs. Xmax X-coordinate
305	General curve data Y1 – Abs. Xmax Y-coordinate
306	General curve data Y1 – Abs. Xmin X-coordinate
307	General curve data Y1 – Abs. Xmin Y-coordinate
308	General curve data Y1 – Abs. Ymax X-coordinate
309	General curve data Y1 – Abs. Ymax Y-coordinate
310	General curve data Y1 – Abs. Ymin X-coordinate
311	General curve data Y1 – Abs. Ymin Y-coordinate
312	General curve data Y1 – Return point X-coordinate
313	General curve data Y1 – Return point Y-coordinate
314	Reference point
400	General curve data Y2 – Start X
401	General curve data Y2 – Start Y
402	General curve data Y2 – End X
403	General curve data Y2 –End Y
404	General curve data Y2 – Abs- Xmax X-coordinate
405	General curve data Y2 – Abs. Xmax Y-coordinate
406	General curve data Y2 – Abs. Xmin X-coordinate
407	General curve data Y2 – Abs. Xmin Y-coordinate
408	General curve data Y2 – Abs. Ymax X-coordinate
409	General curve data Y2 – Abs. Ymax Y-coordinate
410	General curve data Y2 – Abs. Ymin X-coordinate
411	General curve data Y2 – Abs. Ymin Y-coordinate
412	General curve data Y2 – Return point X-coordinate
413	General curve data Y2 – Return point Y-coordinate
414	Reference point

Number	ID of operant
500	Window 1 – Entry X
501	Window 1 – Entry Y
502	Window 1 – Exit X
503	Window 1 – Exit Y
504	Window 1 – Abs. minimum X
505	Window 1 – Abs. minimum Y
506	Window 1 – Abs. maximum X
507	Window 1 – Abs. maximum Y
508	Window 1 – Loc. minimum X
509	Window 1 – Loc. minimum Y
510	Window 1 – Loc. maximum X
511	Window 1 – Loc. maximum Y
512	Window 1 – Bend X
513	Window 1 – Bend Y
514	Window 1 – Mean value Y
515	Window 1 – Gradient
516	Window 1 – Area
517	Window 1 – Coordinate Xmin
518	Window 1 – Coordinate Xmax
519	Window 1 – Coordinate Ymin
520	Window 1 – Coordinate Ymax
600	Window 2 – Entry X
601	Window 2 – Entry Y
602	Window 2 – Exit X
603	Window 2 – Exit Y
604	Window 2 – Abs. minimum X
605	Window 2 – Abs. minimum Y
606	Window 2 – Abs. maximum X

Number	ID of operant
607	Window 2 – Abs. maximum Y
608	Window 2 – Loc. minimum X
609	Window 2 – Loc. minimum Y
610	Window 2 – Loc. maximum X
611	Window 2 – Loc. maximum Y
612	Window 2 – Bend X
613	Window 2 – Bend Y
614	Window 2 – Mean value Y
615	Window 2 – Gradient
616	Window 2 – Area
617	Window 2 – Coordinate Xmin
618	Window 2 – Coordinate Xmax
619	Window 2 – Coordinate Ymin
620	Window 2 – Coordinate Ymax
700	Window 3 – Entry X
701	Window 3 – Entry Y
702	Window 3 – Exit X
703	Window 3 – Exit Y
704	Window 3 – Abs. minimum X
705	Window 3 – Abs. minimum Y
706	Window 3 – Abs. maximum X
707	Window 3 – Abs. maximum Y
708	Window 3 – Loc. minimum X
709	Window 3 – Loc. maximum Y
710	Window 3 – Loc. maximum X
711	Window 3 – Loc. maximum Y
712	Window 3 – Bend X
713	Window 3 – Bend Y

Number	ID of operant
714	Window 3 – Mean value Y
715	Window 3 – Gradient
716	Window 3 – Area
717	Window 3 – Coordinate Xmin
718	Window 3 – Coordinate Xmax
719	Window 3 – Coordinate Ymin
720	Window 3 – Coordinate Ymax
800	Window 4 – Entry X
801	Window 4 – Entry Y
802	Window 4 – Exit X
803	Window 4 – Exit Y
804	Window 4 – Abs. minimum X
805	Window 4 – Abs. minimum Y
806	Window 4 – Abs. maximum X
807	Window 4 – Abs. maximum Y
808	Window 4 – Loc. minimum X
809	Window 4 – Loc. minimum Y
810	Window 4 – Loc. maximum X
811	Window 4 – Loc. maximum Y
812	Window 4 – Bend X
813	Window 4 – Bend Y
814	Window 4 – Mean value Y
815	Window 4 – Gradient
816	Window 4 – Area
817	Window 4 – Coordinate Xmin
818	Window 4 – Coordinate Xmax
819	Window 4 – Coordinate Ymin
820	Window 4 – Coordinate Ymax

Number	ID of operant
900	Window 5 – Entry X
901	Window 5 – Entry Y
902	Window 5 – Exit X
903	Window 5 – Exit Y
904	Window 5 – Abs. minimum X
905	Window 5 – Abs. minimum Y
906	Window 5 – Abs. maximum X
907	Window 5 – Abs. maximum Y
908	Window 5 – Loc. minimum X
909	Window 5 – Loc. minimum Y
910	Window 5 – Loc. maximum X
911	Window 5 – Loc. maximum Y
912	Window 5 – Bend X
913	Window 5 – Bend Y
914	Window 5 – Mean value Y
915	Window 5 – Gradient
916	Window 5 – Area
917	Window 5 – Coordinate Xmin
918	Window 5 – Coordinate Xmax
919	Window 5 – Coordinate Ymin
920	Window 5 – Coordinate Ymax
1000	Window 6 – Entry X
1001	Window 6 – Entry Y
1002	Window 6 – Exit X
1003	Window 6 – Exit Y
1004	Window 6 – Abs. minimum X
1005	Window 6 – Abs. maximum Y

Number	ID of operant
1006	Window 6 – Abs. maximum X
1007	Window 6 – Abs. maximum Y
1008	Window 6 – Loc. minimum X
1009	Window 6 – Loc. minimum Y
1010	Window 6 – Loc. maximum X
1011	Window 6 – Loc. maximum Y
1012	Window 6 – Bend X
1013	Window 6 – Bend Y
1014	Window 6 – Mean value Y
1015	Window 6 – Gradient
1016	Window 6 – Area
1017	Window 6 – Coordinate Xmin
1018	Window 6 – Coordinate Xmax
1019	Window 6 – Coordinate Ymin
1020	Window 6 – Coordinate Ymax
1100	Window 7 – Entry X
1101	Window 7 – Entry Y
1102	Window 7 – Exit X
1103	Window 7 – Exit Y
1104	Window 7 – Abs. minimum X
1105	Window 7 – Abs. minimum Y
1106	Window 7 – Abs. maximum X
1107	Window 7 – Abs. maximum Y
1108	Window 7 – Loc. minimum X
1109	Window 7 – Loc. minimum Y
1110	Window 7 – Loc. maximum X
1111	Window 7 – Loc. maximum Y
1112	Window 7 – Bend X

Number	ID of operant
1113	Window 7 – Bend Y
1114	Window 7 – Mean value Y
1115	Window 7 – Gradient
1116	Window 7 – Area
1117	Window 7 – Coordinate Xmin
1118	Window 7 – Coordinate Xmax
1119	Window 7 – Coordinate Ymin
1120	Window 7 – Coordinate Ymax
1200	Window 8 – Entry X
1201	Window 8 – Entry Y
1202	Window 8 – Exit X
1203	Window 8 – Exit Y
1204	Window 8 – Abs. minimum X
1205	Window 8 – Abs. minimum Y
1206	Window 8 – Abs. maximum X
1207	Window 8 – Abs. maximum Y
1208	Window 8 – Loc. minimum X
1209	Window 8 – Loc. minimum Y
1210	Window 8 – Loc. maximum X
1211	Window 8 – Loc. maximum Y
1212	Window 8 – Bend X
1213	Window 8 – Bend Y
1214	Window 8 – Mean value Y
1215	Window 8 – Gradient
1216	Window 8 – Area
1217	Window 8 – Coordinate Xmin
1218	Window 8 – Coordinate Xmax
1219	Window 8 – Coordinate Ymin

Number	ID of operant
1220	Window 8 – Coordinate Ymax
1300	Window 9 – Entry X
1301	Window 9 – Entry Y
1302	Window 9 – Exit X
1303	Window 9 – Exit Y
1304	Window 9 – Abs. minimum X
1305	Window 9 – Abs. minimum Y
1306	Window 9 – Abs. maximum X
1307	Window 9 – Abs. maximum Y
1308	Window 9 – Loc. minimum X
1309	Window 9 – Loc. minimum Y
1310	Window 9 – Loc. maximum X
1311	Window 9 – Loc. maximum Y
1312	Window 9 – Bend X
1313	Window 9 – Bend Y
1314	Window 9 – Mean value Y
1315	Window 9 – Gradient
1316	Window 9 – Area
1317	Window 9 – Coordinate Xmin
1318	Window 9 – Coordinate Xmax
1319	Window 9 – Coordinate Ymin
1320	Window 9 – Coordinate Ymax
1400	Window 10 – Entry X
1401	Window 10 – Entry Y
1402	Window 10 – Exit X
1403	Window 10 – Exit Y
1404	Window 10 – Abs. minimum X

Number	ID of operant
1405	Window 10 – Abs. minimum Y
1406	Window 10 – Abs. maximum X
1407	Window 10 – Abs. maximum Y
1408	Window 10 – Loc. minimum X
1409	Window 10 – Loc. minimum Y
1410	Window 10 – Loc. maximum X
1411	Window 10 – Loc. maximum Y
1412	Window 10 – Bend X
1413	Window 10 – Bend Y
1414	Window 10 – Mean value Y
1415	Window 10 – Gradient
1416	Window 10 – Area
1417	Window 10 – Coordinate Xmin
1418	Window 10 – Coordinate Xmax
1419	Window 10 – Coordinate Ymin
1420	Window 10 – Coordinate Ymax
1500	Trapezoid window X1 – Entry X
1501	Trapezoid window X1 – Entry Y
1502	Trapezoid window X1 – Exit X
1503	Trapezoid window X1 – Exit Y
1504	Trapezoid window X1 – Coordinate Xmin
1505	Trapezoid window X1 – Coordinate Xmax
1506	Trapezoid window X1 – Coordinate Ymin left
1507	Trapezoid window X1 – Coordinate Ymin right
1508	Trapezoid window X1 – Coordinate Ymax left
1509	Trapezoid window X1 – Coordinate Ymax right
1600	Trapezoid window X2 – Entry X

Number	ID of operant
1601	Trapezoid window X2 – Entry Y
1602	Trapezoid window X2 – Exit X
1603	Trapezoid window X2 – Exit Y
1604	Trapezoid window X2 – Coordinate Xmin
1605	Trapezoid window X2 – Coordinate Xmax
1606	Trapezoid window X2 – Coordinate Ymin left
1607	Trapezoid window X2 – Coordinate Ymin right
1608	Trapezoid window X2 – Coordinate Ymax left
1609	Trapezoid window X2 – Coordinate Ymax right
1700	Trapezoid window Y1 – Entry X
1701	Trapezoid window Y1 – Entry Y
1702	Trapezoid window Y1 – Exit X
1703	Trapezoid window Y1 – Exit Y
1704	Trapezoid window Y1 – Coordinate Ymin
1705	Trapezoid window Y1 – Coordinate Ymax
1706	Trapezoid window Y1 – Coordinate Xmin bottom
1707	Trapezoid window Y1 –Coordinate Xmin top
1708	Trapezoid window Y1 – Coordinate Xmax bottom
1709	Trapezoid window Y1 – Coordinate Xmax top
1800	Trapezoid window Y2 – Entry X
1801	Trapezoid window Y2 – Entry Y
1802	Trapezoid window Y2 – Exit X
1803	Trapezoid window Y2 – Exit Y
1804	Trapezoid window Y2 – Coordinate Ymin
1805	Trapezoid window Y2 – Coordinate Ymax
1806	Trapezoid window Y2 .- Coordinate Xmin bottom
1807	Trapezoid window Y2 – Coordinate Xmin top

Number	ID of operant
1808	Trapezoid window Y2 – Coordinate Xmax bottom
1809	Trapezoid window Y2 – Coordinate Xmax top
1900	Threshold 1 – Pass X
1901	Threshold 1 – Pass Y
1902	Threshold 1 – Abs. minimum X
1903	Threshold 1 – Abs. minimum Y
1904	Threshold 1 – Abs. maximum X
1905	Threshold 1 – Abs. maximum Y
1906	Threshold 1 – Loc. minimum X
1907	Threshold 1 – Loc. minimum Y
1908	Threshold 1 – Loc. maximum X
1909	Threshold 1 – Loc. maximum Y
1910	Threshold 1 – Bend X
1911	Threshold 1 – Bend Y
1912	Threshold 1 – Mean value Y
1913	Threshold 1 – Gradient
1914	Threshold 1 – Area
1915	Threshold 1 – Coordinate X value
1916	Threshold 1 – Coordinate Ymin
1917	Threshold 1 – Coordinate Ymax
2000	Threshold 2 – Pass X
2001	Threshold 2 – Pass Y
2002	Threshold 2 – Abs. minimum X
2003	Threshold 2 – Abs. minimum Y
2004	Threshold 2 – Abs. maximum X
2005	Threshold 2 – Abs. maximum Y
2006	Threshold 2 – Loc. minimum X

Number	ID of operant
2007	Threshold 2 – Loc. minimum Y
2008	Threshold 2 – Loc. maximum X
2009	Threshold 2 – Loc. maximum Y
2010	Threshold 2 – Bend X
2011	Threshold 2 – Bend Y
2012	Threshold 2 – Mean value Y
2013	Threshold 2 – Gradient
2014	Threshold 2 – Area
2015	Threshold 2 – Coordinate X value
2016	Threshold 2 – Coordinate Ymin
2017	Threshold 2 – Coordinate Ymax
2100	Threshold 3 – Pass X
2101	Threshold 3 – Pass Y
2102	Threshold 3 – Abs. minimum X
2103	Threshold 3 – Abs. minimum Y
2104	Threshold 3 – Abs. maximum X
2105	Threshold 3 – Abs. maximum Y
2106	Threshold 3 – Loc. minimum X
2107	Threshold 3 – Loc. minimum Y
2108	Threshold 3 – Loc. maximum X
2109	Threshold 3 – Loc. maximum Y
2110	Threshold 3 – Bend X
2111	Threshold 3 – Bend Y
2112	Threshold 3 – Mean value Y
2113	Threshold 3 – Gradient
2114	Threshold 3 – Area
2115	Threshold 3 – Coordinate X value
2116	Threshold 3 – Coordinate Ymin

Number	ID of operant
2117	Threshold 3 – Coordinate Ymax
2200	Threshold 4 – Pass X
2201	Threshold 4 – Pass Y
2202	Threshold 4 – Abs. minimum X
2203	Threshold 4 – Abs. minimum Y
2204	Threshold 4 – Abs. maximum X
2205	Threshold 4 – Abs. maximum Y
2206	Threshold 4 – Loc. minimum X
2207	Threshold 4 – Loc. minimum Y
2208	Threshold 4 – Loc. maximum X
2209	Threshold 4 – Loc. maximum Y
2210	Threshold 4 – Bend X
2211	Threshold 4 – Bend Y
2212	Threshold 4 – Mean value Y
2213	Threshold 4 – Gradient
2214	Threshold 4 – Area
2215	Threshold 4 – Coordinate X value
2216	Threshold 4 – Coordinate Ymin
2217	Threshold 4 – Coordinate Ymax
2300	Envelope 1 – Entry X
2301	Envelope 1 – Entry Y
2302	Envelope 1 – Exit X
2303	Envelope 1 – Exit Y
2304	Envelope 1 – Coordinate Start X
2305	Envelope 1 – Coordinate End X
2400	Envelope 2 – Entry X

Number	ID of operant
2401	Envelope 2 – Entry Y
2402	Envelope 2 – Exit X
2403	Envelope 2 – Exit Y
2404	Envelope 2 – Coordinate Start X
2405	Envelope 2 – Coordinate End X

7.2 Error codes

Error Code	Description
0x00	**GSR_SUCCESS** *No error, write/read successful*
0x05	**EIP_GSR_BAD_CLASS_INSTANCE** *This class/instance is not specified* ***Note**: Only instance 1 is supported*
0x09	**EIP_GSR_BAD_ATTR_DATA** *The write request has been declined.* *Please check your data and data length here*
0x0F	**EIP_GSR_PERMISSION_DENIED** *Reading /Writing of this attribute is not supported*
0x14	**EIP_GSR_UNDEFINED_ATTR** *This attribute is not implemented by the firmware. Please refer to operation manual to check whether the attribute number is correct.*
0x1E	**EIP_GSR_SERVICE_ERROR** *Read/Write request has been declined by device. Please refer to device operation manual to check if this parameter is writeable/readable*