Configuration Manual

FOUNDATION™ Fieldbus and PROFIBUS® PA

6 3 5 0

PROFIBUS® PA / FOUNDATION™ Fieldbus Transmitter

No. 6350Q100(0407)
From ser. no. 030145001

Approvals

ATEX

FM APPROVED

SIGNALS THE BEST

MTS Messtechnik Schaffhausen GmbH
CH-8260 Stein am Rhein
Telefon +41 52-672 50 00
Messen Prüfen Automatisieren www.mts.ch

CONTENTS

Introduction 4
This configuration manual 4
The Fieldbus Software 4
Driver for Siemens PDM software 4
Parameter lists abbreviations 4
1.0 The Resource Block, Fieldbus Foundation 5
1.1 Introduction 5
1.2 Description 5
1.3 RESTART parameter 5
1.4 Non-volatile parameters 5
1.5 Timeout for remote cascade modes 5
1.6 Alert Notification 5
1.7 FEATURES / FEATURE_SEL parameters 6
1.8 Fault state for the whole resource 6
1.9 Write lock by software 6
1.10 Features being implemented 6
1.11 BLOCK_ERR 6
1.12 Supported Modes 6
1.13 Resource Block Parameter List, Fieldbus Foundation 7
1.14 The Physical Block (PA Slot 0), Profibus 8
1.14.1 Diagnosis 8
1.14.2 Diagnosis of the Device Characteristics 8
1.15 Physical Block (PA Slot 0) Parameter List, Profibus 9
2.0 The Transducer Block 10
2.1 The Transducer Block 10
2.2 The data of the Transducer Block Parameter List are grouped as follows: 10
2.3 Default configuration 10
2.4 Your application set up. 10
2.5 AI_Transducer Block Configuration Flowchart 11
2.6 - Transducer Block Examples Setup 14
2.6.1 Measurement of RTD with one sensor: 14
2.6.2 Measurement of RTD with two sensors: 14
2.6.3 Measurement of thermocouple with one sensor: 14
2.6.4 Measurement of thermocouple with two sensors: 15
2.6.5 Measurement of resistance (linear) with one sensor: 15
2.6.6 Measurement of resistance (linear) with two sensors: 15
2.6.7 Measurement of potentiometer (linear) with one sensor: 16
2.6.8 Measurement of potentiometer (linear) with two sensors: 16
2.6.9 Measurement of voltage (linear) with one sensor: 16
2.6.10 Measurement of voltage (linear) with two sensors: 17
2.6.11 Measurement of 2 potentiometers (with Linear interpolation linearisation): . . 17
2.6.12 Measurement of TC (with Custom Polynomial Linearisation) on sensor 1 . . . 18
2.6.13 Converting a Current Signal to digital bus communication 19
2.7 AI_Transducer and PR_CUST_LIN Block, Schematic 20
2.8 AI_TRANSDUCER Block (PA Slot 3) Parameter List 21
2.8.1 Sensor characterising parameters 21
2.8.2 RTD / Resistor specific parameters 22
2.8.3 Thermocouple specific parameters 22
2.8.4 Output conditioning parameters 23
2.8.5 Output parameters 23
2.8.6 Diagnostic parameters 24
2.8.7 Sensor error detection parameters 24

2.8.8 Sensor calibration, Description 25
2.8.9 Sensor Calibration Parameters 25
2.9 PR_CUST_LIN Block (PA Slot 4) Parameter List 27
2.9.1 Linear interpolation linearisation, Description 27
2.9.2 Linear Interpolation Linearisation, Parameter List. 27
2.9.3 Custom polynomial linearisation, Description 28
2.9.4 Custom Polynomial Linearisation, Parameter List 29
2.10 PR_CUST_PRIV Block (PA Slot 5) Reserved Parameter List 29
2.10.1 Description, PR_CUST_PRIV Block 29
3.0 Analogue Input Blocks 30
3.1 Analogue Input Blocks, Fieldbus Foundation 30
3.2 Overview 30
3.3 Analogue Input Block Schematic 30
3.4 Description 30
3.5 Supported Modes 31
3.6 To enable the Simulation mode 31
3.7 Alarm Types 31
3.8 Mode Handling 31
3.9 Status Handling 31
3.10 Initialisation 31
3.11 Analogue Input Blocks Parameter List, Fieldbus Foundation 31
3.12 Analogue Input Blocks, Profibus 33
3.13 Analogue Input Blocks Overview, Profibus 33
3.14 Analogue Input Blocks (PA Slot 1 & 2) Parameter List, Profibus 34
4.0 PID Control Block, Fieldbus Foundation 35
4.1 Introduction: 35
4.2 Overview 35
4.3 Schematic: 35
4.4 Description 35
4.5 Supported Modes 36
4.6 Alarm Types 36
4.7 Mode Handling 36
4.8 Status Handling 36
4.9 Initialization 36
4.10 PID Control Block Parameter List 37
5.0 Link Active Scheduler (LAS) 40
5.1 Introduction: 40
5.2 Overview 40
5.3 Description 40

Introduction

This configuration manual

contains the necessary information for configuration of the temperature transmitter PR6350 via a host system with application software for either FoundationTM Fieldbus or Profibus® PA. The autoswitch function of the modules ensures automatic switch to the connected protocol.

The Fieldbus Software

has been developped by PR electronics A/S according to the specifications of the Fieldbus Foundation and the PROFIBUS Nutzerorganisation.

The files for Foundation™ Fieldbus are:

xxyy.ffo	- Device Description binary file
xxyy.sym	- Device Description symbol file
xxyyzz.cff	- Capability file

xx, yy and zz refer to the version numbers of the files.

The files for Profibus® PA are:

PREL6350.gsd	- Geräte Stamm Datei (Device Description Data)
PR6350D.bmp	- Icon for dianostic mode
PR6350N.bmp	- Icon for normal mode
PR6350S.bmp	- Icon for special operation mode

PR electronics fieldbus transmitters are delivered with a CD that contains the files needed to configure the transmitters from a fieldbus host. These files can also be downloaded from our homepage www.prelectronics.com.

Please follow the instructions for the application software in question when installing the files.

Driver for Siemens PDM software

PR electronics has developped Device Description Language files for the Siemens PDM application software for Profibus® PA.

The files for Siemens PDM are:

PREL6350.devices	Installation file
PREL6350.ddl	Device Description file

These files can be delivered to interested customers at request.

Please follow the instructions for the Siemens PMD application software when installing the files.

Parameter lists abbreviations

In the Store column:

SRC = Static Revision Counter; N = No; D = Dynamic;

Cst = Constant. The parameter doesn’t change in a device

In the RO / R/W column:

RO = Read Only; R /W = Read Write; * = Mixed of RO and R/W; ** = Don’t care

1.0 The Resource Block, Fieldbus Foundation

1.1 Introduction

The resource block is used to define a hardware specific characteristics of the function block applications. It provides PR's manufacturer's name, device name, DD and block status and hardware details. It also indicates how much resource (memory and CPU) is available and controls the overall device.

1.2 Description

This block contains data that is specific to the hardware that is associated with the resource. All data is modelled within a controlled space, so there are no outside inputs into this block required.

This parameter "set" is intended to be the minimum required for the Function Block Application associated with the resource in which it resides. Some parameters that could be in the set, like calibration data and ambient temperature, are more part of their respective transducer blocks. The "mode" is used to control major states of the resource. O/S mode stops all function block execution. The actual mode of the function blocks will be changed to O/S (out of service), but the target mode will not be changed. Auto mode allows normal operation of the resource. IMan shows that the resource is initializing or receiving a software download. Parameters MANUFAC_ID, DEV_TYPE, DEV_REV, DD_REV, and DD_RESOURCE are required to identify and locate the DD so that Device Description Hosting Services can select the correct DD for use with the resource. The parameter HARD_TYPES is a read only bit string that indicates the types of hardware that are available to this resource. If an I/O block is configured that requires a type of hardware that is not available, the result will be a block alarm for a configuration error. The RS_STATE parameter contains the operational state of the Function Block Application for the resource containing this resource block.

1.3 RESTART parameter

The RESTART parameter allows degrees of initialization of the resource. They are:
1 - Run: it is the passive state of the parameter
2 - Restart resource: it is intended to clear up problems for example the memory management resource.
3 - Restart with defaults: it is intended to wipe configuration memory, it works like a factory initialization.
4 - Restart processor: it provides a way to hit the reset button on the processor associated with the resource This parameter does not appear in a view because it returns to 1 shortly after being written.

1.4 Non-volatile parameters

All non-volatile parameters are saved in EEPROM and therefore used if the device is restarted.

1.5 Timeout for remote cascade modes

SHED_RCAS and SHED_ROUT set the time limit for loss of communication from a remote device. These constants are used by all function blocks that support a remote cascade mode. The effect of a timeout is described in Mode Calculation. Shedding from RCAS/ROUT shall not happen when SHED_RCAS or SHED_ROUT is set to zero.

1.6 Alert Notification

The MAX_NOTIFY parameter value is the maximum number of alert reports that this resource can have sent without getting a confirmation, corresponding to the amount of buffer space available for alert messages. A user can set the number lower than that, to control alert flooding, by adjusting the LIM_NOTIFY parameter value. If LIM_NOTIFY is set to zero, then no alerts are reported. The CONFIRM_TIME parameter is the time for the resource to wait for confirmation of receipt of a report before trying again. If the CONFIRM_TIME = 0 the device shall not retry.

1.7 FEATURES / FEATURE_SEL parameters

The bit strings FEATURES and FEATURE_SEL determine optional behaviour of the resource. The first defines the available features, and is read only. The second is used to turn on an available feature by configuration. If a bit is set in FEATURE_SEL that is not set in FEATURES, the result will be a block alarm for a configuration error. The device supports the following features: Reports supported, Fault State supported, Soft Write lock supported.

1.8 Fault state for the whole resource

If the user sets the SET_FSTATE parameter, the FAULT_STATE parameter will indicate active and it will cause all output function blocks in the resource to go immediately to the condition chosen by the fault state Type I/O option. It may be cleared by setting the CLR_FSTATE parameter. The set and clear parameters do not appear in a view because they are momentary.

1.9 Write lock by software

The WRITE_LOCK parameter, if set, will prevent any external change to the static or non volatile data base in the Function Block Application of the resource. Block connections and calculation results will proceed normally, but the configuration will be locked. It is set and cleared by writing to the WRITE_LOCK parameter. Clearing WRITE_LOCK will generate the discrete alert WRITE_ALM, at the WRITE_PRI priority. Setting WRITE_LOCK will clear the alert, if it exists. Before setting WRITE_LOCK parameter to Locked, it is necessary to select the “Soft Write lock supported” option in FEATURE_SEL.

1.10 Features being implemented

The parameter CYCLE_TYPE is a bit string that defines the types of cycles that this resource can do. CYCLE_SEL allows the configurator to choose one of them. If CYCLE_SEL contains more than one bit, or the bit set is not set in CYCLE_TYPE, the result will be a block alarm for a configuration error. MIN_CYCLE_T is the manufacturer specified minimum time to execute a cycle. It puts a lower limit on the scheduling of the resource.

MEMORY_SIZE declares the size of the resource for configuration of function blocks, in kilobytes. The parameter FREE_SPACE shows the percentage of configuration memory that is still available. FREE_TIME shows the approximate percentage of time that the resource has left for processing new function blocks, should they be configured.

1.11 BLOCK_ERR

The BLOCK_ERR of the resource block will reflect the following causes:

Device Fault State Set – When FAULT_STATE is active.

Simulate Active – When the Simulate jumper is ON.

Out of Service – When the block is in O/S mode.

1.12 Supported Modes

O/S, IMAN and AUTO

1.13 Resource Block Parameter List, Fieldbus Foundation

Parameter	Rel. Index	Description	Type	Store	Size byte	RO / R/W	Min.	Max.	Default
ST_REV	1	Is incremented each time that there is a change in a static parameter in the physical block.	Un-signed 16	SRC	2	RO			0
TAG_DESC	2	Tag name of the block. This parameter must be unique in the configuration.	OCTET_ STRING	SRC	32	R/W			»«
STRATEGY	3	This can be used to group a Function Block. It is a user sup-plied parameter for identification purpose.	Un-signed 16	SRC	2	R/W			0
ALERT_KEY	4	Alert keys	Un-signed 8	SRC	1	R/W			0
MODE_BLK	5	Block running mode	DS-69	Mix	4	*			1,1, 17,16
BLOCK_ERR	6	Block errors	BIT_ STRING	D	2	RO			0
RS_STATE	7	State of the function block application state machine	Un-signed 8	D	1	RO			0
TEST_RW	8	Read/write test parameter used only for conformance testing	DS-85	D	112	R/W			0..0
DD_RESOURCE	9	String identifying the tag of the resource which contains the Device Description for this resource.	VISIBLE_ STRING	SRC	32	RO			» »
MANUFAC_ID	10	Enumeration; controlled by FF Manufacturer identification number - used by an interface device to locate the DD file for the resource.	Un-signed 32	SRC	4	RO			PR Electronics A/S
DEV_TYPE	11	Manufacturer's model number associated with the resource - used by interface devices to locate the DD file for the resource.	Un-signed 16	SRC	2	RO			129
DEV_REV	12	Manufacturer revision number associated with the resource - used by an interface device to locate the DD file for the resource.	Un-signed 8	SRC	1	RO			1
DD_REV	13	Revision of the DD associated with the resource - used by an interface device to locate the DD file for the resource.	Un-signed 8	SRC	1	RO			1
GRANT_DENY	14	Access Permissions. Options for controlling access of host computer and local control panels to operating, tuning and alarm parameters of the block.	DS-70	SRC	2	R/W			0
HARD_TYPES	15	The types of hardware available as channel numbers.	BIT_ STRING	SRC	2	RO			0
RESTART	16	1: Run, 2: Restart resource, 3: Restart with defaults, 4: Restart processor Allows a manual restart to be initiated. Several degrees of restart are possible.	Un-signed 8	D	1	R/W			1
FEATURES	17	Used to show supported resource block options.	BIT_ STRING	SRC	2	RO			0
FEATURE_SEL	18	Used to select resource block options.	BIT_ STRING	SRC	2	RW			0
CYCLE_TYPE	19	Identifies the block execution methods available for this resource	BIT_ STRING	SRC	2	RO			0xC000
CYCLE_SEL	20	Used to select the block execution method for this resource.	BIT_ STRING	SRC	2	**			0xC000
MIN_CYLCE_T	21	Time duration of the shortest cycle interval of which the resource is capable.	Un-signed 32	SRC	4	RO			0
MEMORY_SIZE	22	Available configuration memory in the empty resource. To be checked before attempting a download.	Un-signed 16	SRC	2	RO			0
NV_CYCLE_T	23	Interval between writing copies of NV parameters to non-vola-tile memory. Zero means never.	Un-signed 32	SRC	4	RO			0
FREE_SPACE	24	Percent of memory available for further configuration. Zero in a preconfigured resource.	Floating Point	D	4	RO			0.0
FREE_TIME	25	Percent of the block processing time that is free to process additional blocks.	Floating Point	D	4	RO			0.0
SHED_RCAS	26	Time duration at which to give up on computer writes to func-tion block RCas locations.	Un-signed 32	SRC	4	R/W			640000
SHED_ROUT	27	ms time duration at which to give up on computer writes to function block ROut locations.	Un-signed 32	SRC	4	R/W			640000

Parameter	Rel. Index	Description	Type	Store	Size byte	RO / R/W	Min.	Max.	Default
FAULT_STATE	28	Active E D Condition set by loss of communication to an output block, failure promoted to an output block or a physical contact. When Fault State condition is set, Then output function blocks will perform their FSAFE actions.	Unsigned 8	N	1	RO			1
SET_FSTATE	29	Allows the fault state condition to be manually initiated by selecting Set.	Unsigned 8	D	1	R/W			1
CLR_FSTATE	30	Writing a Clear to this parameter will clear the device fault state if the field condition, if any, has cleared.	Unsigned 8	D	1	R/W			1
MAX_NOTIFY	31	Maximum number of unconfirmed notify messages possible.	Unsigned 8	SRC	1	RO			8
LIM_NOTIFY	32	Maximum number of unconfirmed alert notify messages allowed.	Unsigned 8	SRC	1	R/W			8
CONFIRM_TIME	33	Ms The minimum time between retries of alert reports.	Unsigned 32	SRC	4	R/W			640000
WRITE_LOCK	34	If set, no writes from anywhere are allowed, except to clear WRITE_LOCK. Block inputs will continue to be updated.	Unsigned 8	SRC	1	R/W			1
UPDATE_EVT	35	This alert is generated by any change to the static data	DS-73	D	14	RO			0,0,0, 0,0,9,0
BLOCK_ALM	36	The block alarm is used for all configuration, hardware, connection failure or system problems in the block. The cause of the alert is entered in the sub code field. The first alert to become active will set the Active status in the Status attribute. As soon as the Unreported status is cleared by the alert reporting task, another block alert may be reported without clearing the Active status, if the sub code has changed.	DS-72	D	13	R/W			0,0,0, 0,0,0, 8,0,0
ALARM_SUM	37	The current alert status, unacknowledged states, unreported states, and disabled states of the alarms associated with the function block.	DS-74	Mix	8	R/W			0,0,0,0
ACK_OPTION	38	0: Auto ACK Disable 1: Auto ACK Enable Selection of whether alarms associated with the block will be automatically acknowledged.	BIT_ STRING	SRC	2	R/W			0
WRITE_PRI	39	Priority of the alarm generated by clearing the write lock.	Unsigned 8	SRC	1	R/W			0
WRITE_ALM	40	This alert is generated if the write lock parameter is cleared.	DS-72	D	13	R/W			0,0,0, 0,0,0, 10,0,0
ITK_VER_NR	41	ITK Version Number This parameter informs which ITK version is the device (for certified devices only).	Unsigned 16	SRC	2	RO			4

1.14 The Physical Block (PA Slot 0), Profibus

1.14.1 Diagnosis

In order to provide some information about the device to the control application and the human interface, there are diagnosis parameters in the device. The diagnosis parameters have a bit string data type and there is a mask parameter indicating which diagnosis is supported by the device.

1.14.2 Diagnosis of the Device Characteristics

In the Physical block the DIAGNOSIS parameter has the information about the “alerts” into the device (for instance, device not initialized, power up, factory init, hardware failure, etc). The DIAGNOSIS_MASK has the diagnosis supported by the device.

1.15 Physical Block (PA Slot 0) Parameter List, Profibus

PARAMETER	Rel. Index	Description	Type	Store	Size	R/W	Min	Max	Default
ST_REV	1	Is incremented each time that there is a change in a static parameter in the physical block.	Un-signed 16	N	2	RO			0
TAG_DESC	2	Tag name of the block. This parameter must be unique in the configuration.	OCTET_ STRING	SRC	32	R/W			‘ ‘
STRATEGY	3	This can be used to group a Function Block. It is a user supplied parameter for identification purpose.	Un-signed 16	SRC	2	R/W			0
ALERT_KEY	4	Current state of alarm blocks	Un-signed 8	SRC	1	R/W			0
TARGET_MODE	5	Current desired mode of the block.	Un-signed 8	SRC	1	R/W			-
MODE_BLK	6	A block has static block parameters, that are not changed by the process. Values are assigned to this parameter during the configuration or optimisation. The value of ST_REV must increase by 1 after every change of a static block parameter. This provides a check of the parameter revision.	DS-37	D	3	RO			Block specific
ALARM_SUM	7	Current state of the blocks alarms.	DS-42	D	8	RO			0,0,0,0
SOFTWARE_REVISION	8	Software revision of the device	VISBLE_ STRING	Cst	16	RO			
HARDWARE_REVISION	9	Physical revision of the device.	VISBLE_ STRING	Cst	16	RO			
DEVICE_MAN_ID	10	PR manufacturer identification number.	Un-signed 16	Cst	2	RO			0x006D
DEVICE_ID	11	Manufacturer device number	VISBLE_ STRING	Cst	16	RO			»Pretrans 6350»
DEVICE_SER_NUM	12	Device serial number	VISBLE_ STRING	Cst	16	RO			
DIAGNOSIS	13	Bit string indicating the diagnosis of the device. See Diagnosis	OCTET_ STRING	D	4	RO			
DIAGNOSIS_EXTENSION	14	Not used.	OCTET_ STRING	D	6	RO			
DIAGNOSIS_MASK	15	Not used.	OCTET_ STRING	Cst	4	RO			
DIAGNOSIS_MASK_EXTENSION	16	Not used.	OCTET_ STRING	Cst	6	RO			
DEVICE_CERTIFICATION	17	PA device certification	VISBLE_ STRING	Cst	32	RO			
WRITE_LOCKING	18	If Locked, no writes from anywhere are allowed, except to clear WRITE_LOCK. Cyclic block inputs will continue to be updated.	Un-signed 16	N	2	R/W			
FACTORY_RESET	19	Factory reset: 1: Restart with default 2506: Restart processor 2712: Recover default address to the device	Un-signed 16	SRC	2	R/W			
DESCRIPTOR	20	It is a user supplied description of the block in the application.	OCTET_ STRING	SRC	32	R/W			
DEVICE_MESSAGE	21	It is a user supplied Message of the block in the appli-cation..	OCTET_ STRING	SRC	32	R/W			
DEVICE_INSTAL_DATE	22	Date of the device installation.	OCTET_ STRING	SRC	16	R/W			
LOCAL_OP_ENA	23	Not Used.	Un-signed 8	N	1	R/W			1
IDENT_NUMBER_SELECT	24	0: Profile specific Ident_Num 1: Manufacture specific Ident_Number 2: Manufacture specific Ident_Number of V2.0 3: Ident_Number of Multi_Variable device	Un-signed 8	SRC	1	R/W			
HW_WRITE_PROTECTION	25	Unimplemented							
RESERVED	26-32	Reserved to PNO (PROFIBUS Nutzerorganisation)							

2.0 The Transducer Block

2.1 The Transducer Block

contains all of the manufacturer-specific parameters that define how the PR6350 Transmitter functions. Selections such as setting of input type, engineering units, defining the dual functionality when using the dual input, and so forth, are performed in the Transducer Block.

The transducer block in PR6350 allows the user to select a large number of sophisticated functions. Therefore, the configuration of the transmitter must be carried out with the greatest possible care.

2.2 The data of the Transducer Block Parameter List are grouped as follows:

2.8 AI_TRANSDUCER Block

2.8.1 Sensor characterising parameters
2.8.2 RTD / resistor specific parameters
2.8.3 Thermocouple specific parameters
2.8.4 Output conditioning parameters
2.8.5 Output parameters
2.8.6 Diagnostic parameters
2.8.7 Sensor error detection parameters
2.8.9 Sensor calibration parameters

2.9 PR_CUST_LIN Block

2.9.2 Linear Interpolation Linearisation
2.9.4 Custom Polynomial linearisation

2.10 PR_CUST_PRIV Block

2.10.1 PR_CUST_PRIV Block

All product-specific parameters are set off in grey background in the TB Parameter List. In order to configure these parameters, the files mentioned in the introduction must be available to the application software.

2.3 Default configuration

PR electronics delivers the transmitters with at default configuration which will suit the customer's demand in many cases. The configuration task has thus been reduced considerably. The individual default configurations are shown in the TB Parameter List, but in short the default configuration is as follows:

Pt100 acc. to the standard EN 60 751	(2.8.1 LIN_TYPE, value 102)
°C	(2.8.1 PRIMARY_VALUE_UNIT, value 1001)
3-wire connection	(2.8.2 SENSOR_CONNECTION, value 1)
Only sensor 1	(2.8.4 SENSOR_MEAS_TYPE, value 220)
No sensor error detection	(2.8.7 SENSOR_WIRE_CHECK_1, value 3)

2.4 Your application set up.

In the Transducer block all parameters marked R / W can be adapted to suit any measurement in temperature, ohm or mV. The way of presenting the file data mentioned in the introduction varies greatly from one piece of application software to the other. Some programs show drop down menus in which the parameters must be selected via text lines, while other programs require the user to type in the numerical value of the parameter selection.

2.5 AI_Transducer Block Configuration Flowchart

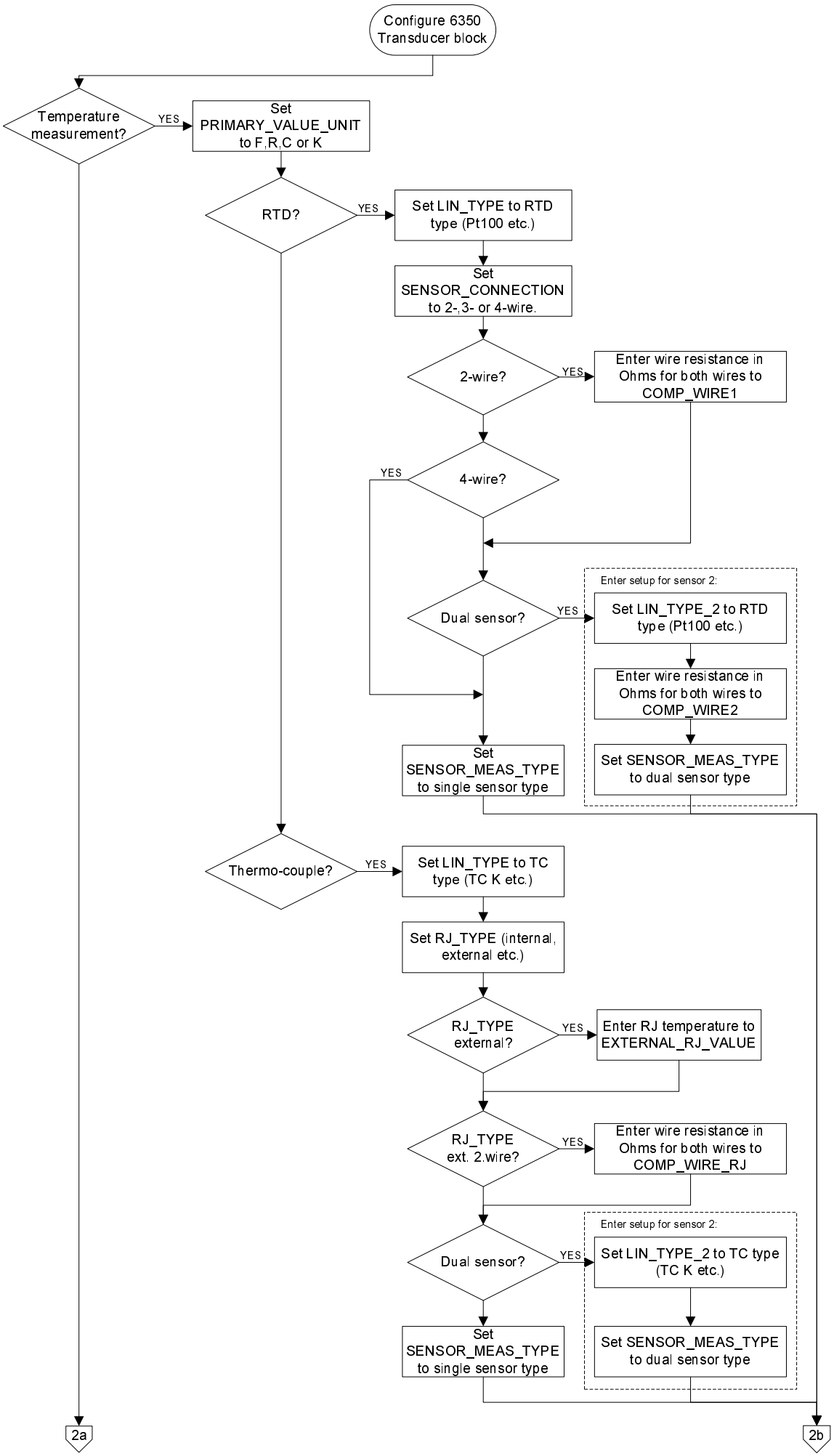

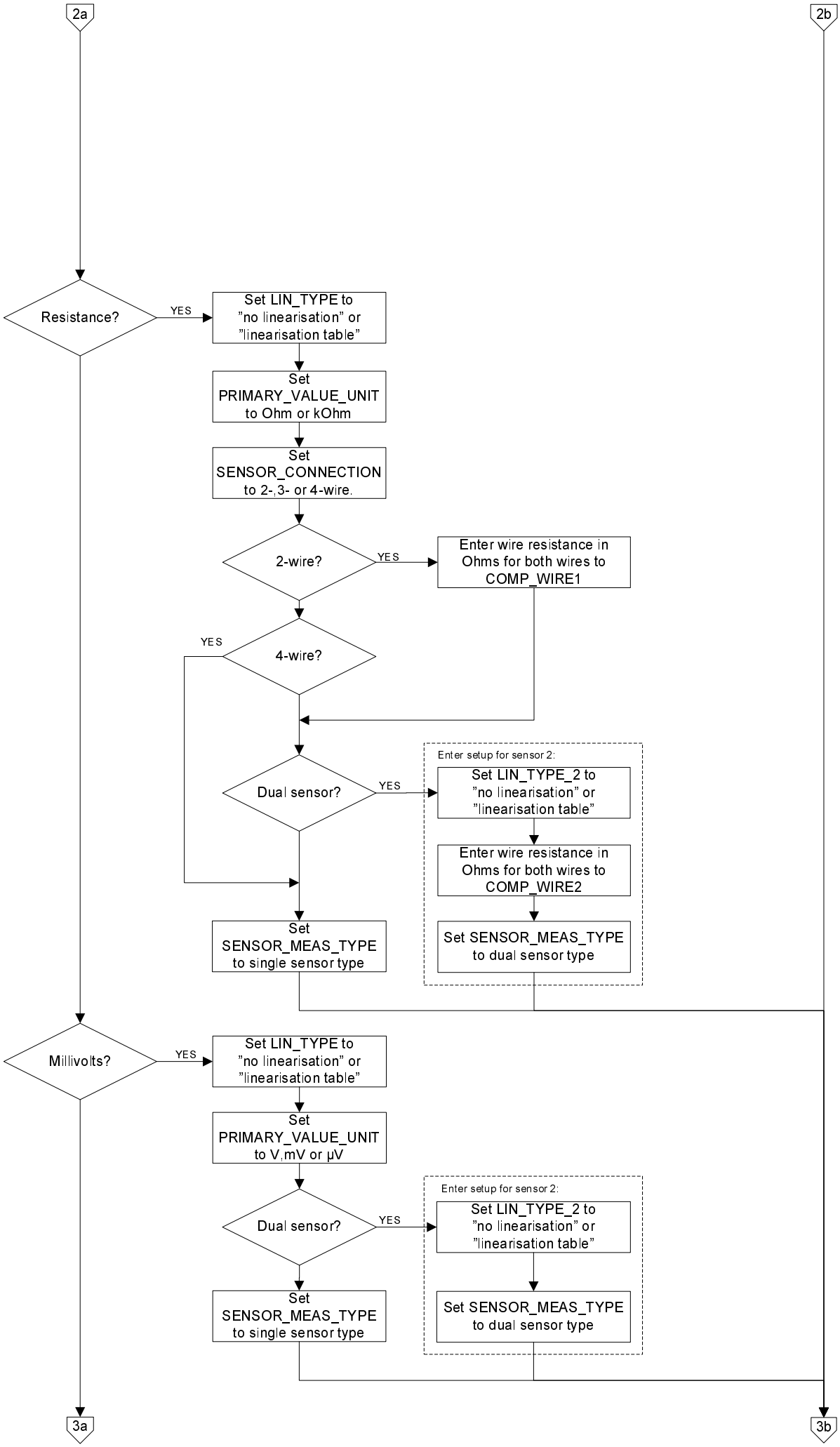
2a
2b
Resistance?
YES
Set LIN_TYPE to "no linearisation" or "linearisation table"
Set PRIMARY_VALUE_UNIT to Ohm or kOhm
Set SENSOR_CONNECTION to 2-,3- or 4-wire.
2-wire?
YES
Enter wire resistance in Ohms for both wires to COMP_WIRE1
YES
4-wire?
Dual sensor?
YES
Enter setup for sensor 2:
Set LIN_TYPE_2 to "no linearisation" or "linearisation table"
Enter wire resistance in Ohms for both wires to COMP_WIRE2
Set SENSOR_MEAS_TYPE to dual sensor type
Set SENSOR_MEAS_TYPE to single sensor type
Millivolts?
YES
Set LIN_TYPE to "no linearisation" or "linearisation table"
Set PRIMARY_VALUE_UNIT to V,mV or µV
Dual sensor?
YES
Enter setup for sensor 2:
Set LIN_TYPE_2 to "no linearisation" or "linearisation table"
Set SENSOR_MEAS_TYPE to dual sensor type
Set SENSOR_MEAS_TYPE to single sensor type
3a
3b

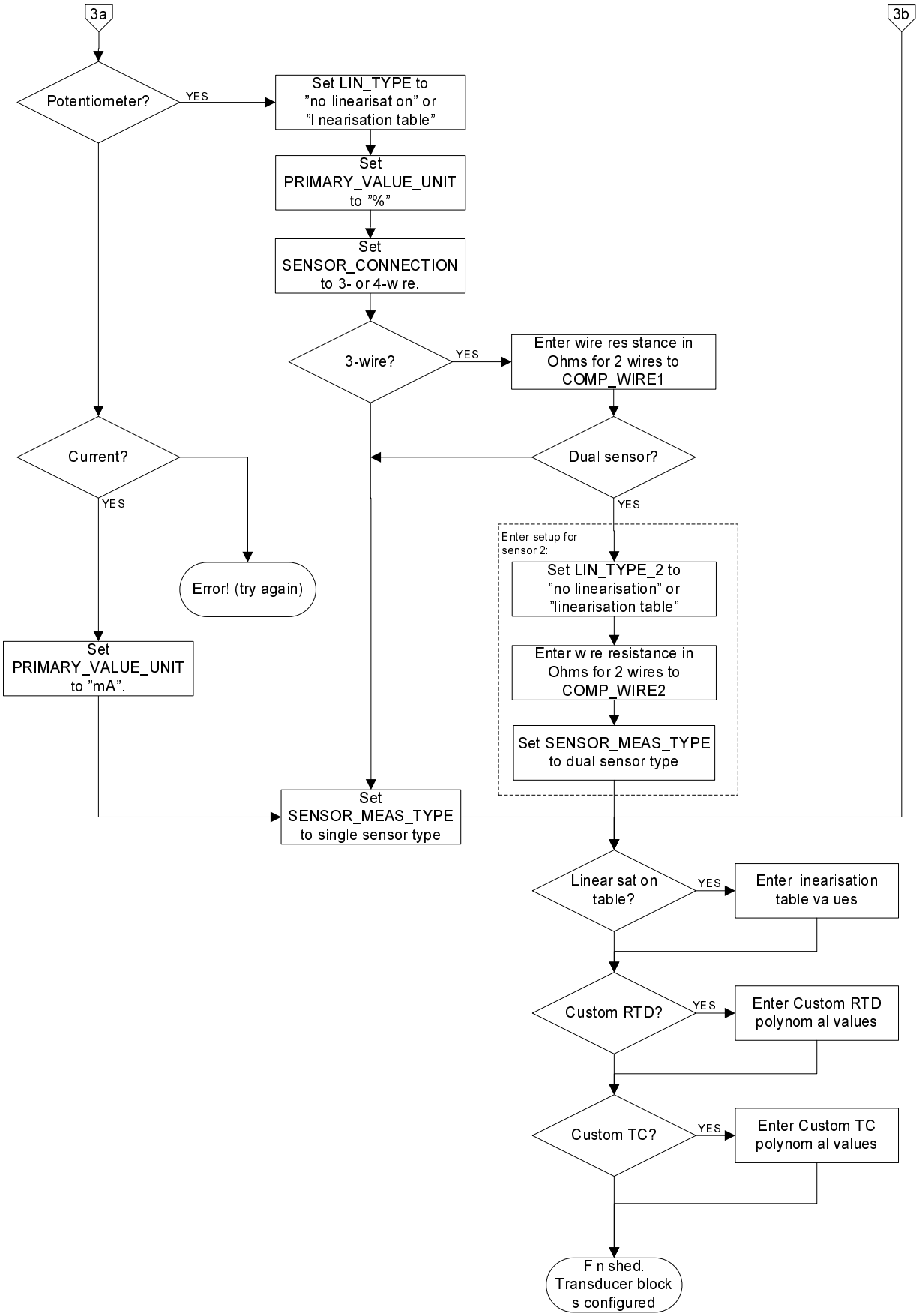
3a
3b
Potentiometer?
YES
Set LIN_TYPE to "no linearisation" or "linearisation table"
Set PRIMARY_VALUE_UNIT to "%"
Set SENSOR_CONNECTION to 3- or 4-wire.
3-wire?
YES
Enter wire resistance in Ohms for 2 wires to COMP_WIRE1
Current?
YES
Dual sensor?
YES
Error! (try again)
Enter setup for sensor 2:
Set LIN_TYPE_2 to "no linearisation" or "linearisation table"
Enter wire resistance in Ohms for 2 wires to COMP_WIRE2
Set SENSOR_MEAS_TYPE to dual sensor type
Set PRIMARY_VALUE_UNIT to "mA".
Set SENSOR_MEAS_TYPE to single sensor type
Linearisation table?
YES
Enter linearisation table values
Custom RTD?
YES
Enter Custom RTD polynomial values
Custom TC?
YES
Enter Custom TC polynomial values
Finished. Transducer block is configured!

2.6 - Transducer Block Examples Setup

2.6.1 Measurement of RTD with one sensor:

PRIMARY_VALUE_UNIT . . . . = K, °C, °F or °R
LIN_TYPE . . . . . = Any RTD
LIN_TYPE_2 . . . . . = N/A (ignored in setup check)
SENSOR_MEAS_TYPE . . . . . = PV = SV_1, SV_2 not available
SENSOR_CONNECTION . . . = 2-, 3- or 4-wire
SENSOR_CONNECTION_2 . = N/A (ignored in setup check)
RJ_TYPE . . . . . = N/A (ignored in setup check)
Connections:

Channel 1:

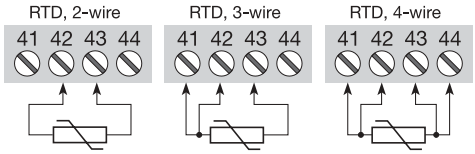

Channel 2:

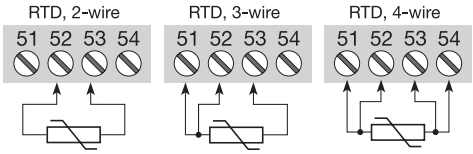

2.6.2 Measurement of RTD with two sensors:

PRIMARY_VALUE_UNIT . . . . = K, °C, °F or °R
LIN_TYPE . . . . . = Any RTD
LIN_TYPE_2 . . . . . = Any RTD
SENSOR_MEAS_TYPE . . . . . = Anything, but not "PV = SV_1, SV_2 not available"
SENSOR_CONNECTION . . . = 2- or 3-wire
SENSOR_CONNECTION_2 . = Default set to 2-wire
RJ_TYPE . . . . . = N/A (ignored in setup check)
Connections:

Channel 1:

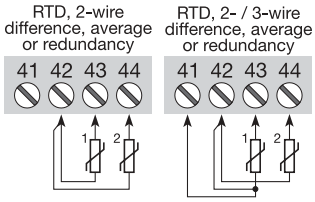

Channel 2:

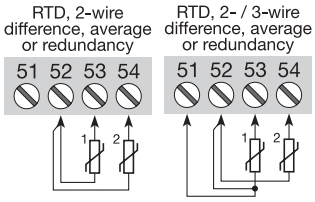

2.6.3 Measurement of thermocouple with one sensor:

PRIMARY_VALUE_UNIT . . . . = K, °C, °F or °R
LIN_TYPE . . . . . = Any TC
LIN_TYPE_2 . . . . . = N/A (ignored in setup check)
SENSOR_MEAS_TYPE . . . . . = PV = SV_1, SV_2 not available
SENSOR_CONNECTION . . . = N/A (ignored in setup check)
SENSOR_CONNECTION_2 . = N/A (ignored in setup check)
RJ_TYPE . . . . . = No Reference Junction, Internal, External (constant value), Sensor 2-wire or Sensor 3-wire
Connections:

Channel 1:

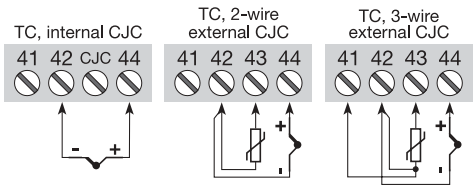

Channel 2:

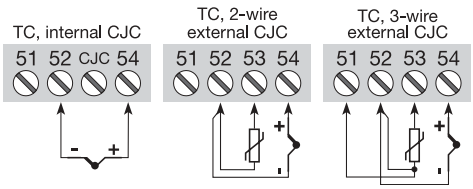

2.6.4 Measurement of thermocouple with two sensors:

PRIMARY_VALUE_UNIT . . . . = K, °C, °F or °R
LIN_TYPE . . . . . = Any TC
LIN_TYPE_2 . . . . . = Any TC
SENSOR_MEAS_TYPE . . . . . = Anything, but not "PV = SV_1, SV_2 not available"
SENSOR_CONNECTION . . . = N/A (ignored in setup check)
SENSOR_CONNECTION_2 . = N/A (ignored in setup check)
RJ_TYPE . . . . . = No RJ, Internal, External (constant value) or Sensor 2-wire
Connections:

Channel 1: Channel 2:

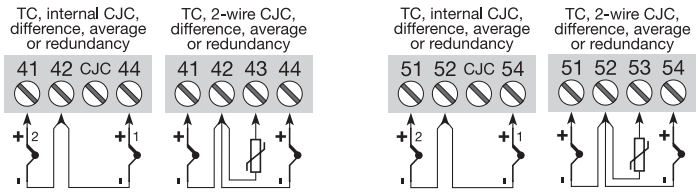

2.6.5 Measurement of resistance (linear) with one sensor:

PRIMARY_VALUE_UNIT . . . . = Ohm or kOhm
LIN_TYPE . . . . . = No linearisation
LIN_TYPE_2 . . . . . = N/A (ignored in setup check)
SENSOR_MEAS_TYPE . . . . . = PV = SV_1, SV_2 not available
SENSOR_CONNECTION . . . = 2-, 3- or 4-wire
SENSOR_CONNECTION_2 . = N/A (ignored in setup check)
RJ_TYPE . . . . . = N/A (ignored in setup check)
Connections:

Channel 1: Channel 2:

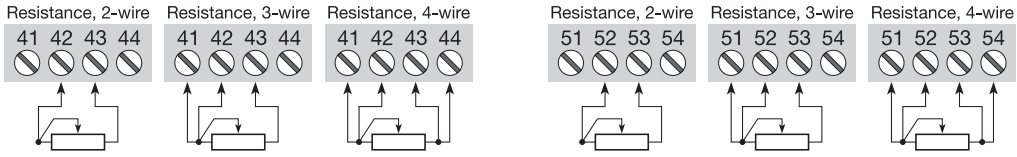

2.6.6 Measurement of resistance (linear) with two sensors:

PRIMARY_VALUE_UNIT . . . . = Ohm or kOhm
LIN_TYPE . . . . . = No linearisation
LIN_TYPE_2 . . . . . = No linearisation
SENSOR_MEAS_TYPE . . . . . = Anything, but not "PV = SV_1, SV_2 not available"
SENSOR_CONNECTION . . . = 2- or 3-wire
SENSOR_CONNECTION_2 . = Default set to 2-wire
RJ_TYPE . . . . . = N/A (ignored in setup check)
Connections:

Channel 1: Channel 2:

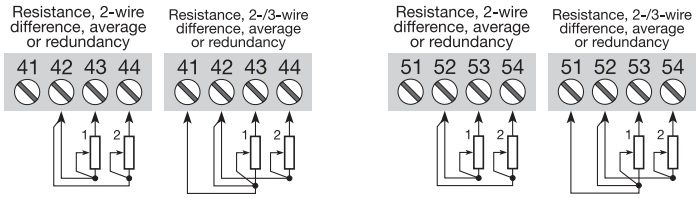

2.6.7 Measurement of potentiometer (linear) with one sensor:

PRIMARY_VALUE_UNIT . . . . = %
LIN_TYPE . . . . . = No linearisation
LIN_TYPE_2 . . . . . = N/A (ignored in setup check)
SENSOR_MEAS_TYPE . . . . . = PV = SV_1, SV_2 not available
SENSOR_CONNECTION . . . = 3- or 4-wire
SENSOR_CONNECTION_2 . = N/A (ignored in setup check)
RJ_TYPE . . . . . = N/A (ignored in setup check)
Connections:

Channel 1: Channel 2:

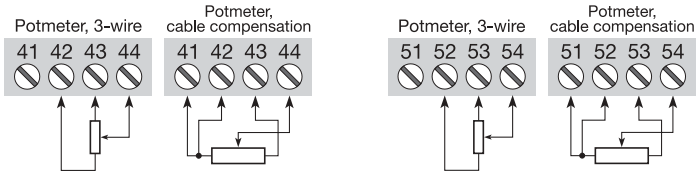

2.6.8 Measurement of potentiometer (linear) with two sensors:

PRIMARY_VALUE_UNIT . . . . = %
LIN_TYPE . . . . . = No linearisation
LIN_TYPE_2 . . . . . = No linearisation
SENSOR_MEAS_TYPE . . . . . = Anything, but not "PV = SV_1, SV_2 not available"
SENSOR_CONNECTION . . . = Default set to 3-wire
SENSOR_CONNECTION_2 . = Default set to 3-wire
RJ_TYPE . . . . . = N/A (ignored in setup check)
Connections:

Channel 1: Channel 2:

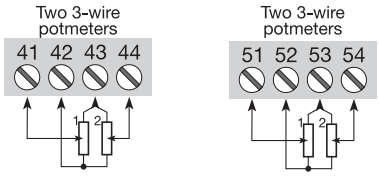

2.6.9 Measurement of voltage (linear) with one sensor:

PRIMARY_VALUE_UNIT . . . . = µV, mV or V
LIN_TYPE . . . . . = No linearisation
LIN_TYPE_2 . . . . . = N/A (ignored in setup check)
SENSOR_MEAS_TYPE . . . . . = PV = SV_1, SV_2 not available
SENSOR_CONNECTION . . . = N/A (ignored in setup check)
SENSOR_CONNECTION_2 . = N/A (ignored in setup check)
RJ_TYPE . . . . . = N/A (ignored in setup check)
Connections:

Channel 1: Channel 2:

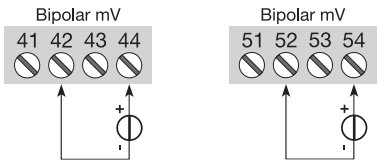

2.6.10 Measurement of voltage (linear) with two sensors:

PRIMARY_VALUE_UNIT . . . . = µV, mV or V
LIN_TYPE . . . . . = No linearisation
LIN_TYPE_2 . . . . . = No linearisation
SENSOR_MEAS_TYPE . . . . . = Anything, but not "PV = SV_1, SV_2 not available"
SENSOR_CONNECTION . . . = N/A (ignored in setup check)
SENSOR_CONNECTION_2 . = N/A (ignored in setup check)
RJ_TYPE . . . . . = N/A (ignored in setup check)
Connections:

Channel 1: Channel 2:

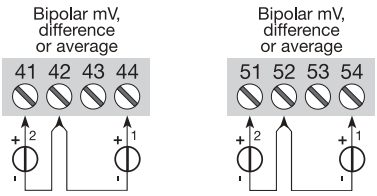

2.6.11 Measurement of 2 potentiometers (with Linear interpolation linearisation):

PRIMARY_VALUE_UNIT . . . . = %
LIN_TYPE . . . . . = Table Linearisation
LIN_TYPE_2 . . . . . = Table Linearisation (same table as sensor 1)
SENSOR_MEAS_TYPE . . . . . = Anything, but not "PV = SV_1, SV_2 not available"
SENSOR_CONNECTION . . . = Default set to 3-wire
SENSOR_CONNECTION_2 . = Default set to 3-wire
RJ_TYPE . . . . . = N/A (ignored in setup check)
Connections:

Channel 1: Channel 2:

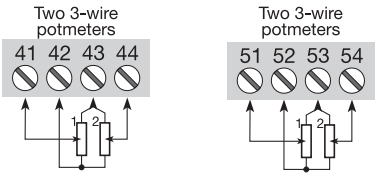

The coordinates (x,y) describing the linear interpolation linearisation must be entered in PR_CUST_LIN Block (PA Slot 4). See 2.9.2 Linear Interpolation Linearisation, Paramter List for further details.

Example:

The coordinates for converting the signal from a logarithmic potentiometer to a linear signal.

TAB_ACTUAL_NUMBER = 10 (number of linearisation points to follow up to max 50)
TAB_XY_VALUE1 = 0,0; -100
TAB_XY_VALUE2 = 0,1; 0
TAB_XY_VALUE3 = 0,2; 100
TAB_XY_VALUE4 = 0,4; 200
TAB_XY_VALUE5 = 0,8; 300
TAB_XY_VALUE6 = 1,6; 400
TAB_XY_VALUE7 = 3,2; 500
TAB_XY_VALUE8 = 6,4; 600
TAB_XY_VALUE9 = 12,8; 700
TAB_XY_VALUE10 = 25,6; 800

(Output will readout 325% with 1,0% potentiometer value)

2.6.12 Measurement of TC (with Custom Polynomial Linearisation) on sensor 1

PRIMARY_VALUE_UNIT = K, °C, °F or °R
LIN_TYPE = Custom defined TC
LIN_TYPE_2 = N/A (ignored in setup check)
SENSOR_MEAS_TYPE = PV = SV_1, SV_2 not available
SENSOR_CONNECTION = N/A (ignored in setup check)
SENSOR_CONNECTION_2 = N/A (ignored in setup check)
RJ_TYPE = No Reference Junction, Internal, External (constant value) or Sensor 2-wire or Sensor 3-wire

Connections:

Channel 1: Channel 2:

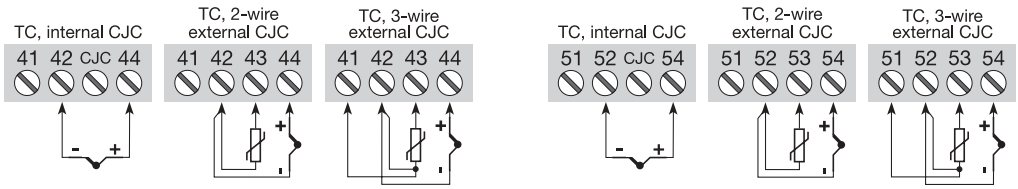

Now enter the Custom TC parameters in PR_CUST_LIN Block (PA Slot 4). See 2.9.4 Custom Polynomial Linearisation, Parameter List for further details.
Remember to enter values for the RJ polynomial if RJ_TYPE is any value other than “No reference Junction”.
Example:
The parameters and coefficients for converting a special TC to a linear temperature signal.

CUSTOM_TC_POLY_X	max. input limit in µV for POLY_X	4th degree coefficient for POLY_X	3th degree coefficient for POLY_X	2th degree coefficient for POLY_X	1st degree coefficient for POLY_X	0 degree coefficient for POLY_X
CUSTOM_TC_POLY_1	-3200.0	-3.84E-13	-5.65E-9	-3.36E-5	-6.10E-2	-8.44E1
CUSTOM_TC_POLY_2	3500.0	-8.13E-15	7.29E-11	-4.18E-7	2.53E-2	-1.08E-2
CUSTOM_TC_POLY_3	10000.0	-1.35E-15	1.50E-11	1.41E-7	2.26E-2	4.18
CUSTOM_TC_POLY_4	30000.0	3.49E-18	2.19E-12	-1.53E-7	2.68E-2	-9.26
CUSTOM_TC_POLY_5	70000.0	6.27E-17	-8.76E-12	5.34E-7	8.69E-3	1.65E2

	3th degree coefficient	2th degree coefficient	1st degree coefficient	0 degree coefficient
CUSTOM_TC_RJ_POLY	-1.11E-4	2.65E-2	3.94E1	3.94E-1

CUSTOM_TC_NAME = Custom TC Example
CUSTOM_TC_POLY_COUNT = 5
CUSTOM_TC_MIN_IN = -6500.0
CUSTOM_TC_MIN_OUT = -100.0
CUSTOM_TC_MAX_OUT = 1200.0

A TC input of 5000 µV and an RJ temperature of 25ºC will make POLY_3 the active and the output will be:

$U_{RJ} = -3.94 * 10^{-1} + 3.94 * 10^{1} * 25 + 2.65 * 10^{-2} * 25^{2} - 1.11 * 10^{-4} * 25^{3} = 1000$ µV

This voltage is to be added to the TC voltage (5000 + 1000), and the resulting temperature will be:

$4.18 + 2.26 * 10^{-2} * 6000 + 1.41 * 10^{-7} * 6000^{2} + 1.50 * 10^{-11} * 6000^{3} - 1.35 * 10^{-15} * 6000^{4} = 146.3$ °C

See 2.9.3 Custom polynomial linearisation, Description for formula and further details.

2.6.13 Converting a Current Signal to digital bus communication

PRIMARY_VALUE_UNIT . . . . = mA
LIN_TYPE . . . . . = No linearisation
LIN_TYPE_2 . . . . . = N/A (ignored in setup check)
SENSOR_MEAS_TYPE . . . . . = PV = SV_1, SV_2 not available
SENSOR_CONNECTION . . . = N/A (ignored in setup check)
SENSOR_CONNECTION_2 . = N/A (ignored in setup check)
RJ_TYPE . . . . . = N/A (ignored in setup check)

Connections:

Channel 1:

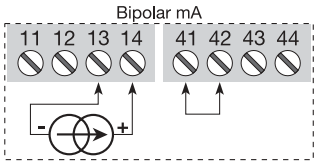

Channel 2:

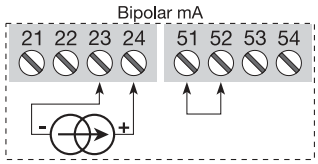

2.7 AI_Transducer and PR_CUST_LIN Block, Schematic

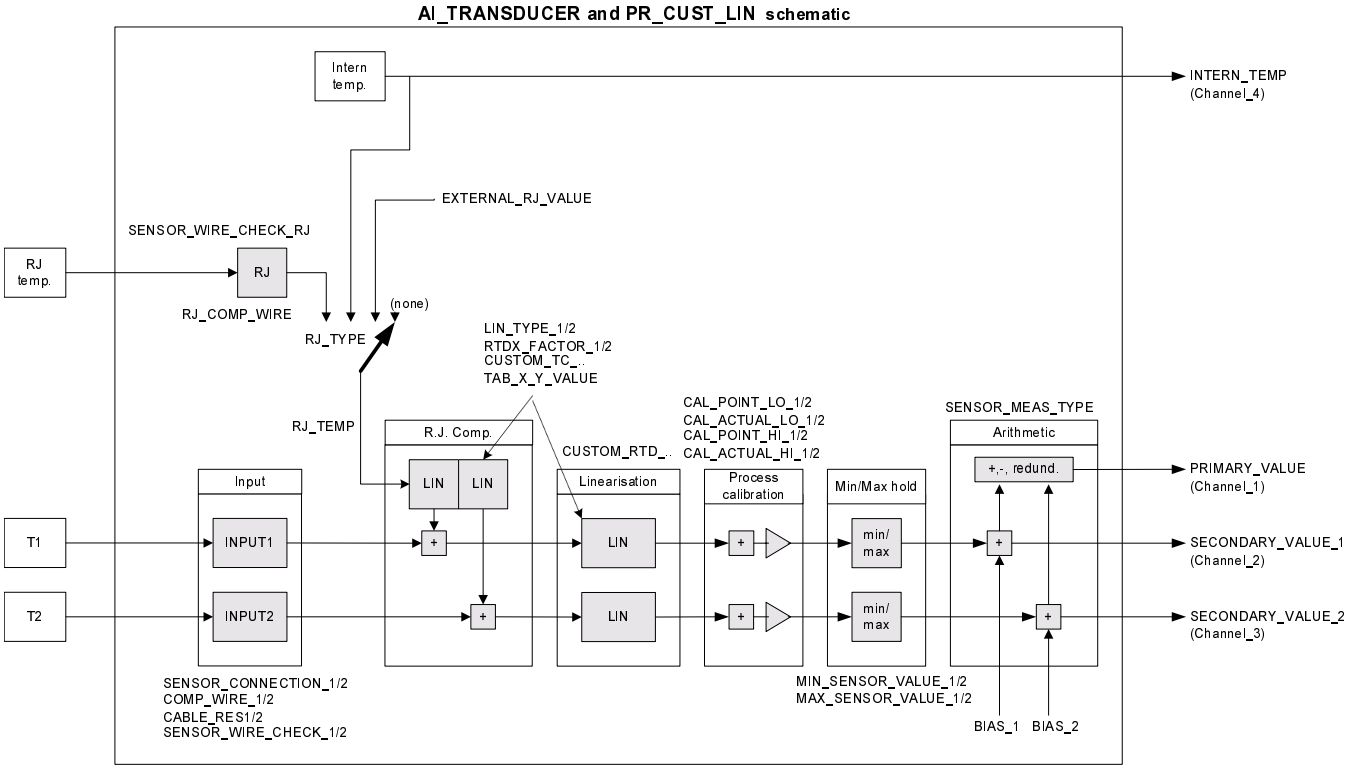

2.8 AI_TRANSDUCER Block (PA Slot 3) Parameter List

2.8.1 Sensor characterising parameters

Parameter	Rel. Index PA/FF	Description	Type	Store	Size byte	RO / R/W	Min.	Max.	Default
PRIMARY_VALUE_UNIT	9/14	Selects the unit code of the PRIMARY_VALUE and other values. 1000 = K (Kelvin) 1001 = °C (degree Celsius) 1002 = °F (degree Fahrenheit) 1003 = Rk (Rankine) 1211 = mA 1240 = V (volt) 1243 = mV millivolt 1244 = µV microvolt 1281 = Ohm Ohm 1284 = kOhm kiloOhm 1342 = % (percent)	Un-signed 16	SRC	2	R/W			1001 (°C)
LIN_TYPE	14/18	Select the type of sensor 1: 0 = no linearisation 1 = linearisation table 100 = RTD Pt10 a = 0.003850 (IEC 60751) 101 = RTD Pt50 a = 0.003850 (IEC 60751) 102 = RTD Pt100 a = 0.003850 (IEC 60751)) 103 = RTD Pt200 a = 0.003850 (IEC 60751)) 104 = RTD Pt500 a = 0.003850 (IEC 60751)) 105 = RTD Pt1000 a = 0.003850 (IEC 60751) 106 = RTD Pt10 a = 0.003916 (JIS C1604-81) 107 = RTD Pt50 a = 0.003916 (JIS C1604-81) 108 = RTD Pt100 a = 0.003916 (JIS C1604-81) 122 = RTD Ni50 a = 0.006180 (DIN 43760) 123 = RTD Ni100 a = 0.006180 (DIN 43760) 124 = RTD Ni120 a = 0.006180 (DIN 43760) 125 = RTD Ni1000 a = 0.006180 (DIN 43760) 126 = RTD Cu10 a = 0.004270 127 = RTD Cu100 a = 0.004270 128 = TC Type B, Pt30Rh-Pt6Rh (IEC 584) 129 = TC Type C (W5), W5-W26Rh (ASTM E 988) 130 = TC Type D (W3), W3-W25Rh (ASTM E 988) 131 = TC Type E, Ni10Cr-Cu45Ni (IEC 584) 133 = TC Type J, Fe-Cu45Ni (IEC 584) 134 = TC Type K, Ni10Cr-Ni5 (IEC 584) 135 = TC Type N, Ni14CrSi-NiSi (IEC 584) 136 = TC Type R, Pt13Rh-Pt (IEC 584) 137 = TC Type S, Pt10Rh-Pt (IEC 584) 138 = TC Type T, Cu-Cu45Ni (IEC 584) 139 = TC Type L, Fe-CuNi (DIN 43710) 140 = TC Type U, Cu-CuNi (DIN 43710) 240 = Custom-defined TC 241 = Custom-defined RTD 242 = Custom-defined RTD PtX a=0.003850 (X factor of Pt1) 243 = Custom-defined RTD NiX a=0.006180 (X factor of Ni1) 244 = Custom-defined RTD CuX a=0.004270 (X factor of Cu1) 245 = Custom-defined RTD PtX a=0.003916 (X factor of Pt1)	Un-signed 8	SRC	1	R/W			102 (Pt100)
UPPER_SENSOR_LIMIT	21/21	Physical upper limit function of sensor1 (e.g. Pt 100 = 850°C) and input range. The unit of UPPER_SENSOR_LIMIT is the PRIMARY_ VALUE_UNIT.	Float	N	4	RO			850
LOWER_SENSOR_LIMIT	22/22	Physical lower limit function of sensor1 (e.g. Pt 100 = -200°C) and input range. The unit of LOWER_SENSOR_LIMIT is the PRIMARY_ VALUE_UNIT.	Float	N	4	RO			-200
LOWER_SENSOR_LIMIT_2	63/39	Physical lower limit function of sensor2 (e.g. Pt 100 = -200°C) and input range. The unit of LOWER_SENSOR_LIMIT is the PRIMARY_ VALUE_UNIT.	Float	N	4	RO			-200
UPPER_SENSOR_LIMIT_2	64/40	Physical upper limit function of sensor2 (e.g. Pt 100 = +850°C) and input range. The unit of UPPER_SENSOR_LIMIT is the PRIMARY_ VALUE_UNIT.	Float	N	4	RO			850
LIN_TYPE_2	65/41	Select the type of sensor 2: See LIN_TYPE for selection and supported types	Un-signed 8	SRC	1	R/W			102

2.8.2 RTD / Resistor specific parameters

Parameter	Rel. Index PA/FF	Description	Type	Store	Size byte	RO / R/W	Min.	Max.	Default
SENSOR_CONNECTION	36/35	Connection to sensor 1, select for 2-, 3- and 4-wire connection. Ignored if sensor 1 is not a resistive sensor. Defined codes: 0 = 2 wires 1 = 3 wires 2 = 4 wires	Un-signed 8	SRC	1	R/W			1
COMP_WIRE1	37/36	Value in OHM to compensate line resistance when Sensor 1 is a resistive sensor, connected with 2 wires.	Float	SRC	4	R/W	0	100	0
COMP_WIRE2	38/37	Value in OHM to compensate line resistance when Sensor 2 is a resistive sensor, connected with 2 wires.	Float	SRC	4	R/W	0	100	0
SENSOR_CONNECTION_2	62/38	Connection to sensor 2, select for 2-, 3- and 4-wire connection. Ignored if sensor 2 is not a resistive sensor. Defined codes: 0 = 2 wires 1 = 3 wires	Un-signed 8	SRC	1	R/W			0
CABLE_RES1	87/63	For 3- or 4-wire resistance measurements. Indicates the measured cable resistance in the wire connected to terminal 3. For 3-wire measurements it is multiplied by 2	Float	D	4	RO			0,0
CABLE_RES2	88/64	For 4-wire resistance measurements. Indicates the measured cable resistance in the wire connected to terminal 6.	Float	D	4	RO			0,0
RTDX_FACTOR_1	89/65	Indicates the X factor for custom defined PtX, NiX, CuX for LIN_TYPE	Un-signed 16	SRC	2	R/W			100
RTDX_FACTOR_2	90/66	Indicates the X factor for custom defined PtX, NiX, CuX for LIN_TYPE_2	Un-signed 16	SRC	2	R/W			100

2.8.3 Thermocouple specific parameters

Parameter	Rel. Index PA/FF	Description	Type	Store	Size byte	RO / R/W	Min.	Max.	Default
RJ_TEMP	33/32	Reference junction temperature. The unit of RJ_TEMP is the PRIMARY_VALUE_UNIT. If PRIMARY_VALUE_UNIT is no temperature unit (e.g. mV) RJ_TEMP is stated in °C.	Float	D	4	RO			0
RJ_TYPE	34/33	Select reference junction from internal to fixed value. Ignored for sensors which are not thermocouple types. Defined codes: 0 = No reference: Compensation is not used (e.g. for TC type B). 1 = Internal: Reference junction temperature is measured by the device itself, via an internally mounted sensor. 2 = External: The fixed value EXTERNAL_RJ_VALUE is used for compensation. The reference junction must be kept at a constant temperature (e.g. by a reference junction thermostat). 3 = Sensor, 2-w.: Reference junction temperature is measured by external 2-wire connected Pt100 sensor. 4 = Sensor, 3-w: Reference junction temperature is measured by external 3-wire connected Pt100 sensor.	Un-signed 8	SRC	1	R/W			0
EXTERNAL_RJ_VALUE	35/34	Fixed temperature value of an external reference junction. The unit of EXTERNAL_RJ_VALUE is the PRIMARY_VALUE_UNIT. If PRIMARY_VALUE_UNIT is no temperature unit (e.g. mV) EXTERNAL_RJ_VALUE is stated in °C.	Float	SRC	4	R/W	-40 (°C)	135 (°C)	0
RJ_COMP_WIRE	66/42	Value in OHM to compensate line resistance when External RJ sensor, connected with 2 wires is used.	Float	SRC	4	R/W	0	100	0

AI_TRANSDUCER Block (PA Slot 3) Parameter List

2.8.4 Output conditioning parameters

Parameter	Rel. Index PA/FF	Description	Type	Store	Size byte	RO / R/W	Min.	Max.	Default
SENSOR_MEAS_TYPE	12/17	Mathematical function to calculate PRIMARY_VALUE (PV). Defined codes: 0: PV = SV_1 1: PV = SV_2 128: PV = SV_1 - SV_2 Difference 129: PV = SV_2 - SV_1 Difference 192: PV = ½ * (SV_1 + SV_2) Average 193: PV = ½ * (SV_1 + SV_2) Average, but SV_1 or SV_2 if the other is wrong (input_fault_x ≠0) 220: PV = SV_1, SV_2 not available. Used for single sensor applications. If selected, Sensor 2 will not be measured. All parameters exclusively related to Sensor 2 are not available, and no alarms will be generated for Sensor 2. 221: PV = SV_1, but SV_2 if SV_1 is wrong (INPUT_FAULT_1 ≠0) 222: PV = SV_2, but SV_1 if SV_2 is wrong (INPUT_FAULT_2 ≠0)	Un-signed 8	SRC	1	R/W			220
BIAS_1	19/19	Bias that can be algebraically added to process value of sensor 1, SV1. The unit of BIAS_1 is the PRIMARY_VALUE_UNIT.	Float	SRC	4	R/W			0
BIAS_2	20/20	Bias that can be algebraically added to process value of sensor 2, SV2. The unit of BIAS_2 is the PRIMARY_VALUE_UNIT.	Float	SRC	4	R/W			0
MAX_SENSOR_VALUE_1	29/28	Holds the maximum SECONDARY_VALUE_1. The unit is defined in SECONDARY_VALUE_1.	Float	N	4	R/W			0
MIN_SENSOR_VALUE_1	30/29	Holds the minimum SECONDARY_VALUE_1. The unit is defined in SECONDARY_VALUE_1.	Float	N	4	R/W			0
MAX_SENSOR_VALUE_2	31/30	See. MAX_SENSOR_VALUE_1	Float	N	4	R/W			0
MIN_SENSOR_VALUE_2	32/31	See. MIN_SENSOR_VALUE_1	Float	N	4	R/W			0

2.8.5 Output parameters

Parameter	Rel. Index PA/FF	Description	Type	Store	Size byte	RO / R/W	Min.	Max.	Default
PRIMARY_VALUE	8/13	Process value, function determined by SENSOR_MEAS_TYPE of SECONDARY_VALUE_1/2. The unit of PRIMARY_VALUE is the PRIMARY_VALUE_UNIT. FF Channel 1 Output. PA Channel 280	DS-33	D	5	RO			0
SECONDARY_VALUE_1	10/15	Process value connected to sensor 1 corrected by BIAS_1. The unit of SECONDARY_VALUE_1 is the PRIMARY_VALUE_UNIT. FF Channel 2 Output, PA Channel 282	DS-33	D	5	RO			0
SECONDARY_VALUE_2	11/16	Process value connected to sensor 2 corrected by BIAS_2. The unit of SECONDARY_VALUE_2 is the PRIMARY_VALUE_UNIT. FF Channel 3 Output, PA Channel 283	DS-33	D	5	RO			0
INTERN_TEMP	69/45	Internal electronics temperature. The unit of INTERN_TEMP is the PRIMARY_VALUE_UNIT. If PRIMARY_VALUE_UNIT is no temperature unit (e.g. mV) INTERN_TEMP is stated in °C. FF Channel 4 Output, PA Channel 341	DS-33	D	5	RO			0

2.8.6 Diagnostic parameters

Parameter	Rel. Index PA/FF	Description	Type	Store	Size byte	RO / R/W	Min.	Max.	Default
INPUT_FAULT_GEN	24/23	Input malfunction: Diagnosis object for errors that concern all values 0 = device OK Bit: 0 = Rj error 1 = Hardware error 2 – 4 = reserved 5 – 7 = manufacturer-specific	Unsigned 8	D	1	RO			0
INPUT_FAULT_1	25/24	Input malfunction: Diagnosis object for errors that concern SV_1 0 = Input OK Bit: 0 = underrange 1 = overrange 2 = lead breakage 3 = short circuit 4 – 5 = reserved 6 – 7 = manufacturer-specific	Unsigned 8	D	1	RO			0
INPUT_FAULT_2	26/25	Input malfunction: Diagnosis object for errors that concern SV_2 0 = Input OK Bit definition see INPUT_FAULT_1	Unsigned 8	D	1	RO			0
RJ_FAULT	67/43	Input malfunction: Diagnosis object for errors that concern RJ sensor. 0 = Input OK Bit: 0 = underrange 1 = overrange 2 = lead breakage 3 = short circuit	Unsigned 8	D	1	RO			0
HW_ERROR	86/62	Diagnostic bit value indicating hardware status 0 = hardware OK Bit: 0 = Input power supply error 1 = Input initialisation error 2 = Input communication error 3 = Internal temperature sensor error 4 = Device not factory calibrated 5 – 6 = reserved 7 = Watchdog initiated cold start occurred	Unsigned 8	D	1	RO			0

2.8.7 Sensor error detection parameters

Parameter	Rel. Index PA/FF	Description	Type	Store	Size byte	RO / R/W	Min.	Max.	Default
SENSOR_WIRE_CHECK_1	27/26	Enables lead breakage and short circuit detection for Sensor 1. List of valid values: 0 =Lead breakage and short circuit detection enable. 1 =Lead breakage detection enable, short circuit detection disable. 2 =Lead breakage detection disable, short circuit detection enable. 3 =Lead breakage and short circuit detection disable.	Unsigned 8	SRC	1	R/W			3
SENSOR_WIRE_CHECK_2	28/27	Enables lead breakage and short circuit detection for Sensor 2. Valid values: see SENSOR_WIRE_CHECK_1.	Unsigned 8	SRC	1	R/W			3
SENSOR_WIRE_CHECK_RJ	68/44	Enables lead breakage and short circuit detection for RJ Sensor. Valid values: see SENSOR_WIRE_CHECK_1.	Unsigned 8	SRC	1	R/W			3

2.8.8 Sensor calibration, Description

Sensor calibration is a very useful function when the transmitter output needs to be adjusted to the sensor signal, e.g. when the temperature sensor does not correspond to the ideal values for the selected temperature range. The results depend on the accuracy of the calibrator or reference equipment. In the following a temperature sensor calibration is described, however the principle can be used for all input types.

SENSOR_CAL_METHOD_1 / 2 defines the use of either “Factory trim Standard” (the factory defined values calculated according to the valid norms) or “User Trim Standard” (the sensor calibrated values) in the transmitter for sensor 1 and 2 respectively. During sensor calibration SENSOR_CAL_METHOD_1 / 2 must be set to “Factory trim Standard” = 103.

The sensor calibration function in PR6350 will change the slope of the linarisation curve so the curve is adjusted to the connected sensor. To obtain accurate temperature measurement in the range e.g. 0...100 °C apply to the sensor a temperature e.g. of 5 °C as the low temperature and e.g. 95 °C as the high temperature through a precise temperature calibrator.

At sensor calibration the succeeding procedure must be followed precisely (Example: sensor 1):

1. SENSOR_CAL_METHOD_1 = 103
2. Apply the low temperature of the calibrator to the sensor
3. CAL_POINT_LO_1 = 5.00 (type in the low temperature of the calibrator)
4. CAL_ACTUAL_LO_1 = 1.00 (The measurement of the deviation starts by typing in a random value)
5. Apply the high temperature of the calibrator to the sensor
6. CAL_POINT_HI_1 = 95.00 (type in the high temperature of the calibrator)
7. CAL_ACTUAL_HI_1 = 1.00 (The measurement of the deviation starts by typing in a random value and PR6350 calculates the curve slope according to the measured deviations.)
8. SENSOR_CAL_METHOD_1 = 104 (the sensor calibration just carried out is used)

2.8.9 Sensor Calibration Parameters

Parameter	Rel. Index PA/FF	Description	Type	Store	Size byte	RO / R/W	Min.	Max.	Default
CAL_POINT_LO_1	70/46	The low calibration value applied to sensor 1 The value from either a calibrator or a reference equipment.	Float	SRC	4	R/W			-10^{38}
CAL_ACTUAL_LO_1	71/47	Entering any value will force the device to automatically measure and store the actual low point value. Must be entered with the applied CAL_POINT_LO_1 value	Float	SRC	4	R/W			-10^{38}
CAL_POINT_HI_1	72/48	The high calibration value applied to sensor 1 The value from either a calibrator or a reference equipment.	Float	SRC	4	R/W			10^{38}
CAL_ ACTUAL _HI_1	73/49	Entering any value will force the device to automatically measure and store the actual high point value. Must be entered with the applied CAL_POINT_HI_1 value	Float	SRC	4	R/W			10^{38}
SENSOR_CAL_METHOD_1	74/50	Enables or disables the last sensor calibration for sensor 1 103 = Factory trim standard (calibration values disabled) 104 = User trim standard (calibration values enabled)	Unsigned 8	SRC	1	R/W			103
SENSOR_CAL_LOC_1	75/51	The last location of the calibrated sensor	OCTET_STRING	SRC	32	R/W			” ”
SENSOR_CAL_DATE_1	76/52	The last date on which the calibration was performed	7 * Unsigned 8	SRC	7	R/W			0,0,0,0, 1,1,103
SENSOR_CAL_WHO_1	77/53	The name of the person responsible for the last sensor calibration	OCTET_STRING	SRC	32	R/W			” ”
CAL_POINT_LO_2	78/54	The low calibration value applied to sensor 2 The value from either a calibrator or a reference equipment.	Float	SRC	4	R/W			-10^{38}
CAL_ACTUAL_LO_2	79/55	Entering any value will force the device to automatically measure and store the actual low point value. Must be entered with the applied CAL_POINT_LO_2 value	Float	SRC	4	R/W			-10^{38}

Parameter	Rel. Index PA/FF	Description	Type	Store	Size byte	RO / R/W	Min.	Max.	Default
CAL_POINT_HI_2	80/56	The high calibration value applied to sensor 2 The value from either a calibrator or a reference equipment.	Float	SRC	4	R/W			10^{38}
CAL_ACTUAL_HI_2	81/57	Entering any value will force the device to automatically measure and store the actual high point value. Must be entered with the applied CAL_POINT_HI_2 value	Float	SRC	4	R/W			10^{38}
SENSOR_CAL_METHOD_2	82/58	Enables or disables the last sensor calibration for sensor 2 103 = Factory trim standard (calibration values disabled) 104 = User trim standard (calibration values enabled)	Unsigned 8	SRC	1	R/W			103
SENSOR_CAL_LOC_2	83/59	The last location of the calibrated sensor	OCTET_STRING	SRC	32	R/W			» »
SENSOR_CAL_DATE_2	84/60	The last date on which the calibration was performed	7 * Unsigned 8	SRC	7	R/W			0,0,0,0,1,1,103
SENSOR_CAL_WHO_2	85/61	The name of the person responsible for the last sensor calibration	OCTET_STRING	SRC	32	R/W			» »

2.9 PR_CUST_LIN Block (PA Slot 4) Parameter List

2.9.1 Linear interpolation linearisation, Description

LinType 1 = “Linearisation Table” generates a customer specific linear interpolation linearisation. Linear interpolation linearisation can be used on mV, ohmic and potentiometer signals.The linear interpolation linearisation is defined by straight lines drawn between the entered X / Y (input / output) coordinates. The linearisation table must consist of 10 to 50 coordinate sets. The X values of the coordinates must be entered in ascending order. The lowest and highest X values function as the lower and the upper limit respectively. All X values must be entered as µV, Ohm or % for Voltage, Resistance or Potentiometer measurements in that order. The table output will be converted to actual chosen PRMARY_VALUE_UNIT (Example: 1000 / 3000 as X / Y values: output will read 3,00 if PRIMARY_VALUE_UNIT is set to “mV” and 1 mV is connected to input).

2.9.2 Linear Interpolation Linearisation, Parameter List.

Parameter	Rel. Index PA/FF	Description	Type	Store	Size byte	RO / R/W	Min.	Max.	Default
TAB_MIN_NUMBER	29/34	Minimum number of linearisation points allowed (10)	Un-signed 8	N	1	RO			10
TAB_MAX_NUMBER	30/35	Maximum number of linearisation points allowed (50)	Un-signed 8	N	1	RO			50
TAB_ACTUAL_NUMBER	31/36	Number of linearisation points in the linearisation table.	Un-signed 8	SRC	1	R/W			11
TAB_X_Y_VALUE1	32/37	Linearisation x,y coordinate 1	Float array	SRC	8	R/W			0, 0
TAB_X_Y_VALUE2	33/38	Linearisation x,y coordinate 2	Float array	SRC	8	R/W			1000, 100
TAB_X_Y_VALUE3	34/39	Linearisation x,y coordinate 3	Float array	SRC	8	R/W			2000, 200
TAB_X_Y_VALUE4	35/40	Linearisation x,y coordinate 4	Float array	SRC	8	R/W			3000, 300
TAB_X_Y_VALUE5	36/41	Linearisation x,y coordinate 5	Float array	SRC	8	R/W			4000, 400
TAB_X_Y_VALUE6	37/42	Linearisation x,y coordinate 6	Float array	SRC	8	R/W			5000, 500
TAB_X_Y_VALUE7	38/43	Linearisation x,y coordinate 7	Float array	SRC	8	R/W			6000, 600
TAB_X_Y_VALUE8	39/44	Linearisation x,y coordinate 8	Float array	SRC	8	R/W			7000, 700
TAB_X_Y_VALUE9	40/45	Linearisation x,y coordinate 9	Float array	SRC	8	R/W			8000, 800
TAB_X_Y_VALUE10	41/46	Linearisation x,y coordinate 10	Float array	SRC	8	R/W			9000, 900
TAB_X_Y_VALUE11	42/47	Linearisation x,y coordinate 11	Float array	SRC	8	R/W			10000, 1000
TAB_X_Y_VALUE12	43/48	Linearisation x,y coordinate 12	Float array	SRC	8	R/W			0, 0
TAB_X_Y_VALUE13	44/49	Linearisation x,y coordinate 13	Float array	SRC	8	R/W			0, 0
TAB_X_Y_VALUE14	45/50	Linearisation x,y coordinate 14	Float array	SRC	8	R/W			0, 0
TAB_X_Y_VALUE15	46/51	Linearisation x,y coordinate 15	Float array	SRC	8	R/W			0, 0
TAB_X_Y_VALUE16	47/52	Linearisation x,y coordinate 16	Float array	SRC	8	R/W			0, 0
TAB_X_Y_VALUE17	48/53	Linearisation x,y coordinate 17	Float array	SRC	8	R/W			0, 0
TAB_X_Y_VALUE18	49/54	Linearisation x,y coordinate 18	Float array	SRC	8	R/W			0, 0
TAB_X_Y_VALUE19	50/55	Linearisation x,y coordinate 19	Float array	SRC	8	R/W			0, 0
TAB_X_Y_VALUE20	51/56	Linearisation x,y coordinate 20	Float array	SRC	8	R/W			0, 0
TAB_X_Y_VALUE21	52/57	Linearisation x,y coordinate 21	Float array	SRC	8	R/W			0, 0
TAB_X_Y_VALUE22	53/58	Linearisation x,y coordinate 22	Float array	SRC	8	R/W			0, 0

Parameter	Rel. Index PA/FF	Description	Type	Store	Size byte	RO / R/W	Min.	Max.	Default
TAB_X_Y_VALUE23	54/59	Linearisation x,y coordinate 23	Float array	SRC	8	R/W			0, 0
TAB_X_Y_VALUE24	55/60	Linearisation x,y coordinate 24	Float array	SRC	8	R/W			0, 0
TAB_X_Y_VALUE25	56/61	Linearisation x,y coordinate 25	Float array	SRC	8	R/W			0, 0
TAB_X_Y_VALUE26	57/62	Linearisation x,y coordinate 26	Float array	SRC	8	R/W			0, 0
TAB_X_Y_VALUE27	58/63	Linearisation x,y coordinate 27	Float array	SRC	8	R/W			0, 0
TAB_X_Y_VALUE28	59/64	Linearisation x,y coordinate 28	Float array	SRC	8	R/W			0, 0
TAB_X_Y_VALUE29	60/65	Linearisation x,y coordinate 29	Float array	SRC	8	R/W			0, 0
TAB_X_Y_VALUE30	61/66	Linearisation x,y coordinate 30	Float array	SRC	8	R/W			0, 0
TAB_X_Y_VALUE31	62/67	Linearisation x,y coordinate 31	Float array	SRC	8	R/W			0, 0
TAB_X_Y_VALUE32	63/68	Linearisation x,y coordinate 32	Float array	SRC	8	R/W			0, 0
TAB_X_Y_VALUE33	64/69	Linearisation x,y coordinate 33	Float array	SRC	8	R/W			0, 0
TAB_X_Y_VALUE34	65/70	Linearisation x,y coordinate 34	Float array	SRC	8	R/W			0, 0
TAB_X_Y_VALUE35	66/71	Linearisation x,y coordinate 35	Float array	SRC	8	R/W			0, 0
TAB_X_Y_VALUE36	67/72	Linearisation x,y coordinate 36	Float array	SRC	8	R/W			0, 0
TAB_X_Y_VALUE37	68/73	Linearisation x,y coordinate 37	Float array	SRC	8	R/W			0, 0
TAB_X_Y_VALUE38	69/74	Linearisation x,y coordinate 38	Float array	SRC	8	R/W			0, 0
TAB_X_Y_VALUE39	70/75	Linearisation x,y coordinate 39	Float array	SRC	8	R/W			0, 0
TAB_X_Y_VALUE40	71/76	Linearisation x,y coordinate 40	Float array	SRC	8	R/W			0, 0
TAB_X_Y_VALUE41	72/77	Linearisation x,y coordinate 41	Float array	SRC	8	R/W			0, 0
TAB_X_Y_VALUE42	73/78	Linearisation x,y coordinate 42	Float array	SRC	8	R/W			0, 0
TAB_X_Y_VALUE43	74/79	Linearisation x,y coordinate 43	Float array	SRC	8	R/W			0, 0
TAB_X_Y_VALUE44	75/80	Linearisation x,y coordinate 44	Float array	SRC	8	R/W			0, 0
TAB_X_Y_VALUE45	76/81	Linearisation x,y coordinate 45	Float array	SRC	8	R/W			0, 0
TAB_X_Y_VALUE46	77/82	Linearisation x,y coordinate 46	Float array	SRC	8	R/W			0, 0
TAB_X_Y_VALUE47	78/83	Linearisation x,y coordinate 47	Float array	SRC	8	R/W			0, 0
TAB_X_Y_VALUE48	79/84	Linearisation x,y coordinate 48	Float array	SRC	8	R/W			0, 0
TAB_X_Y_VALUE49	80/85	Linearisation x,y coordinate 49	Float array	SRC	8	R/W			0, 0
TAB_X_Y_VALUE50	81/86	Linearisation x,y coordinate 50	Float array	SRC	8	R/W			0, 0

2.9.3 Custom polynomial linearisation, Description

Polynomial linearisation can be used on mV and ohmic input signals. Polynomial linearisation is executed according to the function $f(x) = a_0 + a_1*x + a_2*x^2 + a_3*x^3 + a_4*x^4$, in which $a_0...a_4$ equal the coefficients for a fourth order polynomial and x equals the input value. This function requires that the user can obtain or calculate the coefficients of up to 5 fourth order polynomials. Various computer programs such as Math Cad can calculate these coefficients. If the preceding text is unfamiliar one should use the function table linearisation in case of customer specific linearisation.

LIN_TYPE 240 = “Custom defined TC” generates a customer specific polynomial linearisation. The function is primarily suitable for specific thermo elements but also for millivolt signals if the user can accept to enter the input and the output values of the polynomial in µV and °C respectively.

LIN_TYPE 241 = “Custom defined RTD” generates a customer specific polynomial linearisation. The

function is particularly suitable for specific RTD sensors but also for non-linear ohmic signals if the user can accept to enter the input and output values of the polynomials in ohm and °C respectively.
Please remember that polynomial linearisation is absolute. The output value is calculated continuously according to the applied input value and the function formula. The max. input range can be limited precisely to the input range in which the polynomial linearisation will be used. The PRIMARY_VALUE_UNIT defines the unit of the values provided by the AI_TRANSDUCER BLOCK. The parameter OUT_SCALE in the AI block can scale the values and change the unit to e.g. mV or ohm.

2.9.4 Custom Polynomial Linearisation, Parameter List

Parameter	Rel. Index PA/FF	Description	Type	Store	Size byte	RO / R/W	Min.	Max.	Default
CUSTOM_TC_NAME	8/13	Name of Custom defined TC (LIN_TYPE = 240)	OCTET_ STRING	SRC	20	R/W			"Linear TC; no RJ"
CUSTUM_TC_POLY_ COUNT	9/14	Number of 4. order polynomial parts for Custom defined TC	Un-signed 8	SRC	1	R/W			5
CUSTOM_TC_MIN_IN	10/15	Minimum input limit in µV for Custom defined TC	Float	SRC	4	R/W			0
CUSTOM_TC_MIN_OUT	11/16	Minimum usable output value in °C of polynomial set for Custom defined TC	Float	SRC	4	R/W			0
CUSTOM_TC_MAX_OUT	12/17	Maximum usable output value in °C of polynomial set for Custom defined TC	Float	SRC	4	R/W			1500,00
CUSTOM_TC_POLY_1	13/18	Polynomial part 1 of Custom defined TC converting µV to °C. Consisting of: maximum input value in µV, a4..a0 polynomial coefficients.	6*Float	SRC	24	R/W			30000; 0; 0; 0; 0,01; 0
CUSTOM_TC_POLY_2	14/19	Polynomial part 2 of Custom defined TC converting µV to °C. Consisting of: maximum input value in µV, a4..a0 polynomial coefficients.	6*Float	SRC	24	R/W			60000; 0; 0; 0; 0,01; 0
CUSTOM_TC_POLY_3	15/20	Polynomial part 3 of Custom defined TC converting µV to °C. Consisting of: maximum input value in µV, a4..a0 polynomial coefficients.	6*Float	SRC	24	R/W			90000; 0; 0; 0; 0,01; 0
CUSTOM_TC_POLY_4	16/21	Polynomial part 4 of Custom defined TC converting µV to °C. Consisting of: maximum input value in µV, a4..a0 polynomial coefficients.	6*Float	SRC	24	R/W			120000; 0; 0; 0; 0,01; 0
CUSTOM_TC_POLY_5	17/22	Polynomial part 5 of Custom defined TC converting µV to °C. Consisting of: maximum input value in µV, a4..a0 polynomial coefficients.	6*Float	SRC	24	R/W			150000; 0; 0; 0; 0,01; 0
CUSTOM_TC_RJ_POLY	18/23	RJ Polynomial part of custom defined TC, converting °C to µV.: a3..a0 coefficients.	4*Float	SRC	16	R/W			0;0;0;0
CUSTOM_RTD_NAME	19/24	Name of Custom defined RTD (LIN_TYPE = 241)	OCTET_ STRING	SRC	20	R/W			"Linear RTD"
CUSTUM_RTD_POLY_ COUNT	20/25	Number of 4. order polynomial parts for Custom defined RTD	Un-signed 8	SRC	1	R/W			5
CUSTOM_RTD_MIN_IN	21/26	Minimum input limit in Ohm's for Custom defined RTD	Float	SRC	4	R/W			0
CUSTOM_RTD_MIN_OUT	22/27	Minimum usable output value of polynomial set for Custom defined RTD	Float	SRC	4	R/W			0
CUSTOM_RTD_MAX_OUT	23/28	Maximum useable output value of polynomial set for Custom defined RTD	Float	SRC	4	R/W			100,00
CUSTOM_RTD_POLY_1	24/29	Polynomial part 1 of Custom defined RTD convert-ing Ohm to °C. Consisting of maximum input value in Ohms, a4..a0 polynomial coefficients.	6*Float	SRC	24	R/W			2000; 0; 0; 0; 0,01; 0
CUSTOM_RTD_POLY_2	25/30	Polynomial part 2 of Custom defined RTD convert-ing Ohm to °C. Consisting of maximum input value in Ohms, a4..a0 polynomial coefficients.	6*Float	SRC	24	R/W			4000; 0; 0; 0; 0,01; 0
CUSTOM_RTD_POLY_3	26/31	Polynomial part 3 of Custom defined RTD convert-ing Ohm to °C. Consisting of maximum input value in Ohms, a4..a0 polynomial coefficients.	6*Float	SRC	24	R/W			6000; 0; 0; 0; 0,01; 0
CUSTOM_RTD_POLY_4	27/32	Polynomial part 4 of Custom defined RTD convert-ing Ohm to °C. Consisting of maximum input value in Ohms, a4..a0 polynomial coefficients.	6*Float	SRC	24	R/W			8000; 0; 0; 0; 0,01; 0
CUSTOM_RTD_POLY_5	28/33	Polynomial part 5 of Custom defined RTD convert-ing Ohm to °C. Consisting of maximum input value in Ohms, a4..a0 polynomial coefficients.	6*Float	SRC	24	R/W			10000; 0; 0; 0; 0,01; 0

2.10 PR_CUST_PRIV Block (PA Slot 5) Reserved Parameter List

2.10.1 Description, PR_CUST_PRIV Block

The Block is private and reserved.

3.0 Analogue Input Blocks

PR6350 has 2 Analogue Input Blocks to be configured individually. The constrcution of the Blocks is in line with the standards from FOUNDATION Fieldbus and Profibus Nutzerorganisation respectively, and producer specific parameters have not been added. However, the Analogue Input Blocks for Fieldbus Foundation and Profibus are dissimilar due to the parameter differences.

3.1 Analogue Input Blocks, Fieldbus Foundation

3.2 Overview

The AI block takes the manufacturer's input data, selected by channel number, and makes it available to other function blocks at its output.

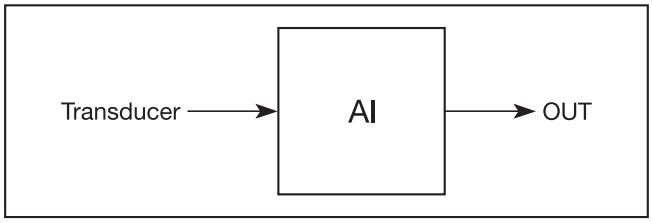

3.3 Analogue Input Block Schematic

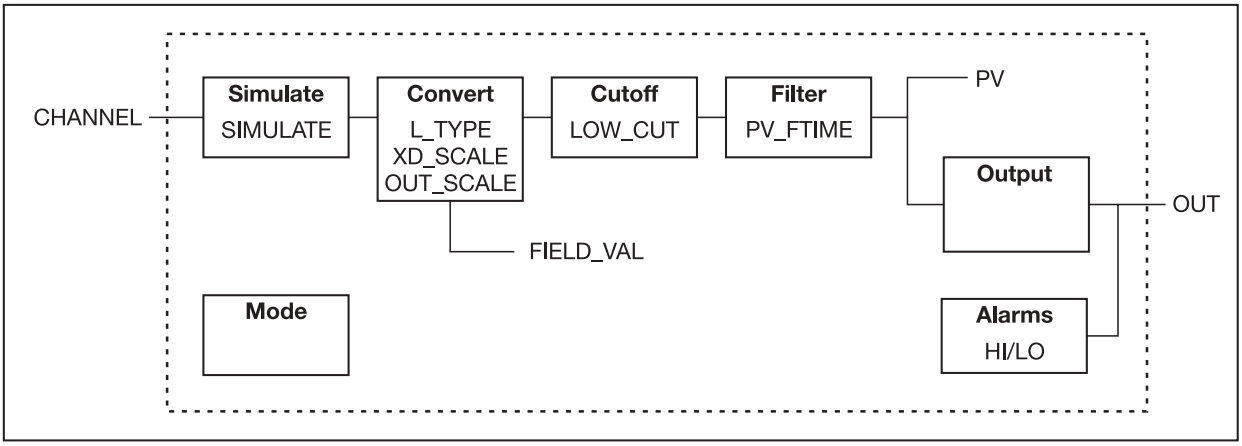

3.4 Description

Transducer scaling (XD_SCALE) is applied to the value from the channel to produce the FIELD_VAL in percent. The XD_SCALE units code must match the channel units code (if one exists), or the block will remain in O/S mode after being configured. A block alarm for units mismatch will be generated. The OUT_SCALE is normally the same as the transducer, but if L_TYPE is set to Indirect or Ind Sqr Root, OUT_SCALE determines the conversion from FIELD_VAL to the output. PV and OUT always have identical scaling.

OUT_SCALE provides scaling for PV. The PV is always the value that the block will place in OUT if the mode is Auto. If Man is allowed, someone may write a value to the output. The status will prevent any attempt at closed loop control using the Man value, by setting the Limit value to Constant.
The LOW_CUT parameter has a corresponding "Low cutoff" option in the IO_OPTS bit string. If the option bit is true, any calculated output below the low cutoff value will be changed to zero. This is only useful for zero-based measurement devices, such as flow. The PV filter, whose time constant is PV_FTIME, is applied to the PV, and not the FIELD_VAL.

Equations:

FIELD_VAL = 100*(channel value - EU@0%) / (EU@100% - EU@0%) [XD_SCALE]

Direct: PV = channel value

Indirect: PV = (FIELD_VAL/100) * (EU@100% - EU@0%) + EU@0% [OUT_SCALE]

Ind Sqr Root: PV = sqrt(FIELD_VAL/100) * (EU@100% - EU@0%) + EU@0% [OUT_SCALE]

3.5 Supported Modes

O/S, Man and Auto.

3.6 To enable the Simulation mode

The hardware lock for the simulation mode is a reed switch mounted in the PR6350 transmitter. The reed switch is activated with a special designed magnet which is mounted inside the transmitter housing. Magnet type no. 8423 can be ordered at PR electronics A/S.

3.7 Alarm Types

Standard block alarm plus standard HI_HI, HI, LO, and LO_LO alarms applied to OUT.

3.8 Mode Handling

Standard transition in and out of O/S.

Standard transition from Man to Auto and back.

3.9 Status Handling

The status values described in Output Parameter Formal Model of Part 1 apply, with the exception of the control sub-status values. The Uncertain - EU Range Violation status is always set if the OUT value exceeds the OUT_SCALE range, and no worse condition exists. The following options from STATUS_OPTS apply, where Limited refers to the sensor limits:

Propagate Fault Forward

Uncertain if Limited

BAD if Limited

Uncertain if Man mode

3.10 Initialisation

The PV filter must be initialised, but other than that, no special initialisation is required. This is a pure calculation algorithm.

3.11 Analogue Input Blocks Parameter List, Fieldbus Foundation

Parameter	Rel. Index	Description	Type	Store	Size byte	RO / R/W	Min	Max	Default
ST_REV	1	The revision level of the static data associated with the function block. To support tracking changes in static parameter attributes, the associated block's static revision parameter will be incremented each time a static parameter attribute value is changed. Also, the associated block's static revision parameter may be incremented if a static parameter attribute is written but the value is not changed.	Unsigned 16	SRC	2	RO			0
TAG_DESC	2	The user description of the intended application of the block.	Octet String	SRC	32	R/W			Spaces
STRATEGY	3	The strategy field can be used to identify grouping of blocks.. This data is not checked or processed by the block.	Unsigned 16	SRC	2	R/W			0
ALERT_KEY	4	The identification number of the plant unit. This information may be used in the host for sorting alarms, etc.	Unsigned 8	SRC	1	R/W	1	255	0
MODE_BLK	5	The actual, target, permitted, and normal modes of the block.	DS-69	Mix	4	*			1, 1, 25, 16
BLOCK_ERR	6	This parameter reflects the error status associated with the hardware or software components associated with a block. It is a bit string, so that multiple errors may be shown.	Bit String	D	2	RO			
PV	7	Either the primary analog value for use in executing the function, or a process value associated with it. May also be calculated from the READBACK value of an AO block.	DS-65	D	5	RO			

Parameter	Rel. Index	Description	Type	Store	Size byte	RO / R/W	Min	Max	Default
OUT	8	The primary analog value calculated as a result of executing the function.	DS-65	N	5	R/W			
SIMULATE	9	Allows the transducer analog input or output to the block to be manually supplied when simulate is enabled. When simulation is disabled, the simulate value and status track the actual value and status.	DS-82	D	11	R/W			Disable
XD_SCALE	10	The high and low scale values, engineering units code, and number of digits to the right of the decimal point used with the value obtained from the transducer for a specified channel.	DS-68	SRC	11	R/W			0-100%
OUT_SCALE	11	The high and low scale values, engineering units code, and number of digits to the right of the decimal point to be used in displaying the OUT parameter and parameters which have the same scaling as OUT.	DS-68	SRC	11	R/W			0-100%
GRANT_DENY	12	Options for controlling access of host computer and local control panels to operating, tuning and alarm parameters of the block.	DS-70	SRC	2	R/W			
IO_OPTS	13	Options which the user may select to alter input and output block processing.	Bit String	SRC	2	R/W			0
STATUS_OPTS	14	Options which the user may select in the block processing of status.	Bit String	SRC	2	R/W			0
CHANNEL	15	The number of the logical hardware channel that is connected to this I/O block. This information defines the transducer to be used going to or from the physical world.	Unsigned 16	SRC	2	R/W			1 or 2
L_TYPE	16	Determines if the values passed by the transducer block to the AI block may be used directly (Direct) or if the value is in different units and must be converted linearly (Indirect), or with square root (Ind Sqr Root), using the input range defined by the transducer and the associated output range.	Unsigned 8	SRC	1	R/W			0
LOW_CUT	17	Limit used in square root processing. A value of zero percent of scale is used in block processing if the transducer value falls below this limit, in % of scale. This feature may be used to eliminate noise near zero for a flow sensor.	Float	SRC	4	R/W			0
PV_FTIME	18	Time constant of a single exponential filter for the PV, in seconds.	Float	SRC	4	R/W			0
FIELD_VAL	19	Raw value of the field device in percent of thePV range, with a status reflecting the Transducer condition, before signal characterization (L_TYPE) or filtering (PV_FTIME).	DS-65	D	5	RO			
UPDATE_EVT	20	This alert is generated by any change to the static data.	DS-73	D	14	RO			
BLOCK_ALM	21	The block alarm is used for all configuration, hardware, connection failure or system problems in the block. The cause of the alert is entered in the subcode field. The first alert to become active will set the Active status in the Status attribute. As soon as the Unreported status is cleared by the alert reporting task, another block alert may be reported without clearing the Active status, if the subcode has changed.	DS-72	D	13	R/W			
ALARM_SUM	22	The current alert status, unacknowledged states, unreported states, and disabled states of the alarms associated with the function block.	DS-74	Mix	8	R/W			
ACK_OPTION	23	Selection of whether alarms associated with the block will be automatically acknowledged.	Bit String	SRC	2	R/W			0
ALARM_HYS	24	Amount the PV must return within the alarm limits before the alarm condition clears. Alarm Hysteresis is expressed as a percent of the PV span .	Float	SRC	4	R/W	0%	50%	0.5%
HI_HI_PRI	25	Priority of the high high alarm.	Unsigned 8	SRC	1	R/W	0	15	0
HI_HI_LIM	26	The setting for high high alarm in engineering units.	Float	SRC	4	R/W			+INF
HI_PRI	27	Priority of the high alarm.	Unsigned 8	SRC	1	R/W	0	15	0
HI_LIM	28	The setting for high alarm in engineering units.	Float	SRC	4	R/W			+INF
LO_PRI	29	Priority of the low alarm.	Unsigned 8	SRC	1	R/W	0	15	0
LO_LIM	30	The setting for the low alarm in engineering units.	Float	SRC	4	R/W			-INF
LO_LO_PRI	31	Priority of the low low alarm.	Unsigned 8	SRC	1	R/W	0	15	0
LO_LO_LIM	32	The setting of the low low alarm in engineering units.	Float	SRC	4	R/W			-INF
HI_HI_ALM	33	The status for high high alarm and its associated time stamp.	DS-71	D	16	R/W			
HI_ALM	34	The status for high alarm and its associated time stamp.	DS-71	D	16	R/W			
LO_ALM	35	The status of the low alarm and its associated time stamp.	DS-71	D	16	R/W			
LO_LO_ALM	36	The status of the low low alarm and its associated time stamp.	DS-71	D	16	R/W			

3.12 Analogue Input Blocks, Profibus

3.13 Analogue Input Blocks Overview, Profibus

Analog Input Function Blocks represent transmitters. The parameters are shown in Figure 1.

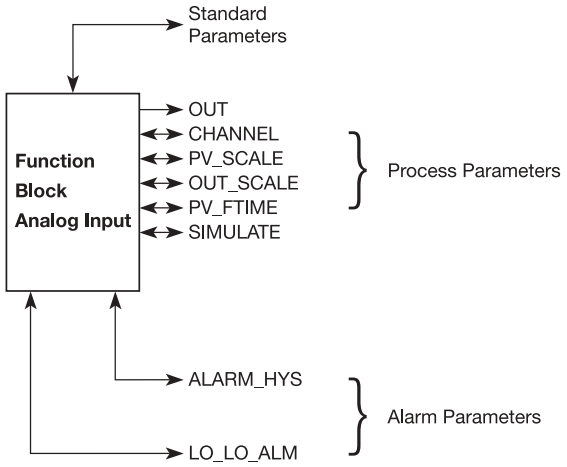

Figure 1: Summary of the parameter of Analog Input Function Blocks.

The structure of the MODE and the simulation feature of the AI is shows in Figure 2.

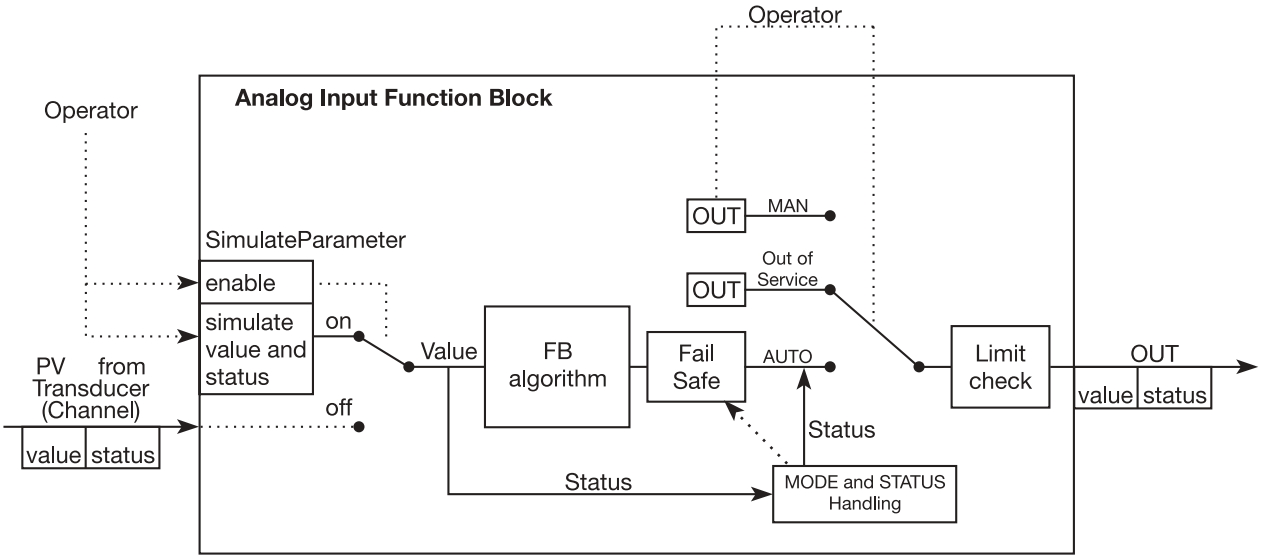

Figure 2: Simulation, Mode and Status diagram of Analog Input Function Block

The structure of the AI with Simulation, Mode and Status is shown in Figure 2. More details about the relationships between the AI parameters are visible in Figure 3.

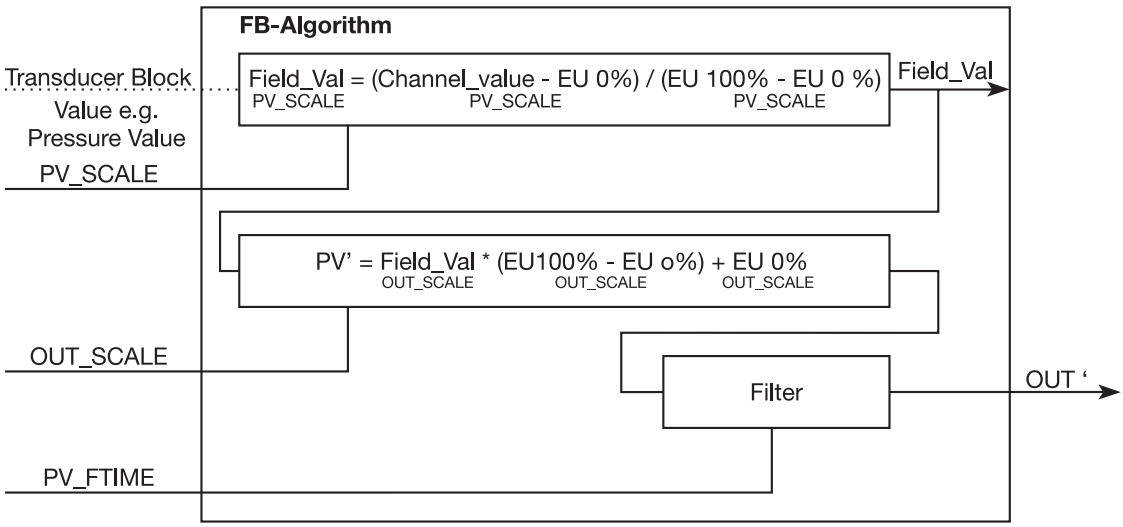

Figure 3: Parameter relationship of AI FB

3.14 Analogue Input Blocks (PA Slot 1 & 2) Parameter List, Profibus

Parameter	Rel. Index	Description	Type	Store	Size byte	RO / R/W	Min.	Max.	Default
ST_REV	1	Static Revision. Counter incremented with every parameter configuration change.	Un-signed 16	N	2	RO			0
TAG_DESC	2	A user-supplied description of the block.	Octet string	SRC	32	R/W			“ “
STRATEGY	3	Grouping of Function Block. The STRATEGY field can be used to group blocks.	Un-signed 16	SRC	2	R/W			0
ALERT_KEY	4	Contains the identification number of the plant unit. It helps to identify the location (plant unit) of an event.	Un-signed 8	SRC	1	R/W			0
TARGET_MODE	5	Contains desired mode normally set by a control application or an operator.	Un-signed 8	SRC	1	R/W			-
MODE_BLK	6	Contains the current mode and the permitted and normal mode of the block.	DS-37	D	3	RO			128,152, 8
ALARM_SUM	7	Contains the current states of the block alarms.	DS-42	D	8	RO			0;0;0;0
BATCH	8	Intended to be used in Batch applications in line with IEC61512 Part 1. Necessary in a distributed fieldbus system to identify used and available channels, in addition used to iden-tify the current batch in case of alerts.	DS-67	SRC	10	R/W			0;0;0;0
OUT	10	Contains the current measurement value in a vendor-specific or configuration-adjusted engineering unit and the belonging state in AUTO MODE.	DS-33	D	5	RO **)			Measured of the variable state
PV_SCALE	11	Conversion of the Process Variable into percent using the high and low scale values. The engineering unit of PV_SCALE high and low scale values are directly related to the PV_UNIT of the configured Transducer Block (configured via Channel parameter). The PV_SCALE high and low scale values follow the changes of the PV_UNIT of the related Transducer Block automatically, i.e. a change of the Transducer Block PV_Unit causes no bump at OUT from AI.	2 * Float	SRC	8	R/W			100; 0
OUT_SCALE	12	Scale of the Process Variable. Contains the values of the lower limit and upper limit effective range, the code number of the engineering unit of Process Variable and the number of digits on the right hand side of the decimal point.	DS-36	SRC	11	R/W			100; 0; -; -
LIN_TYPE	13	Type of linearisation.	Un-signed 8	SRC	1	R/W			0
CHANNEL	14	Reference to the active Transducer Block which provides the measurement value to the Function Block.	Un-signed 16	SRC	2	R/W			1 : 281 2 : 283
PV_FTIME	16	Filter time of the Process Variable. Contains the time constant for the rise time of the FB output up to a value of 63.21% resulted from a jump on the input (PT1 filter). The engineering unit of the parameter is second.	Float	SRC	4	R/W			0
FSAFE_TYPE	17	Defines the reaction of the device if a fault is detected. The calculated ACTUAL MODE remains in AUTO.	Un-signed 8	SRC	1	R/W			1
FSAFE_VALUE	18	Default value for the OUT parameter, if sensor or sensor elec-tronic fault is detected. The unit of this parameter is the same as the OUT unit.	Float	SRC	4	R/W			-
ALARM_HYS	19	Alarm hysteresis. To avoid triggering of many messages.	Float	SRC	4	R/W			0,5% of range
HI_HI_LIM	21	Value for the upper limit of alarms.	Float	SRC	4	R/W			Max value
HI_LIM	23	Value for the upper limit of warnings.	Float	SRC	4	R/W			Max value
LO_LIM	25	Value for the lower limit of warnings.	Float	SRC	4	R/W			Min value
LO_LO_LIM	27	Value for the lower limit of alarms.	Float	SRC	4	R/W			Min value
HI_HI_ALM	30	State of the upper limit of alarms.	DS-39	D	16	RO			0
HI_ALM	31	State of the upper limit of warnings.	DS-39	D	16	RO			0
LO_ALM	32	State of the lower limit of warnings.	DS-39	D	16	RO			0
LO_LO_ALM	33	State of the lower limit of alarms.	DS-39	D	16	RO			0
SIMULATE	34	For commissioning and test purposes the input value from the Transducer Block in the Analogue Input Function Block AI-FB can be modified. This means that the Transducer and AI-FB will be disconnected.	DS-50	SRC	6	R/W			Disabled
OUT_UNIT_TEXT	35	If a specific unit of OUT parameter is not in the code list the user has the possibility of writing the specific text in this para-meter. The unit code is then equal to ”textual unit definition”.	Octet string	SRC	16	R/W			-

4.0 PID Control Block, Fieldbus Foundation

4.1 Introduction:

PR6350 is fitted with a PID Control Block which can only be used in Fieldbus Foundation installations. The PID Block is constructed according to standard specifications outlined in Fieldbus Foundation and producer specific parameters have not been added. Please notice that the PID function is not specified in the Profibus Nutzerorganisation and thus cannot be used in Profibus installations.

4.2 Overview

The PID block is key to many control schemes and is used almost universally, with the exception of PD, which is used when the process itself does the integration. As long as an error exists, the PID function will integrate the error, which moves the output in a direction to correct the error. PID blocks may be cascaded when the difference in process time constants of a primary and secondary process measurement makes it necessary or desirable.

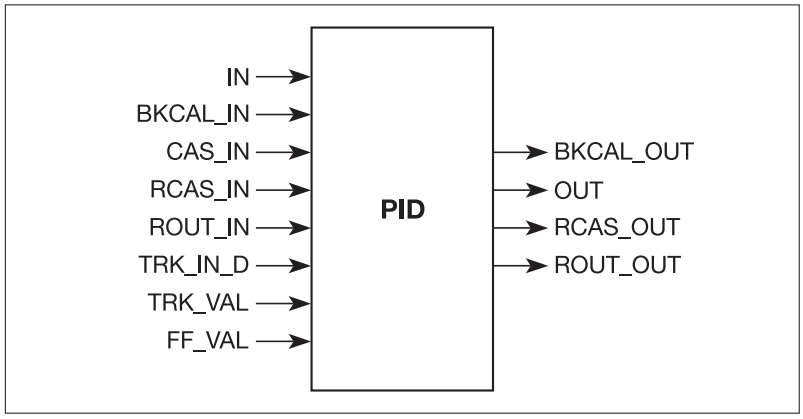

4.3 Schematic:

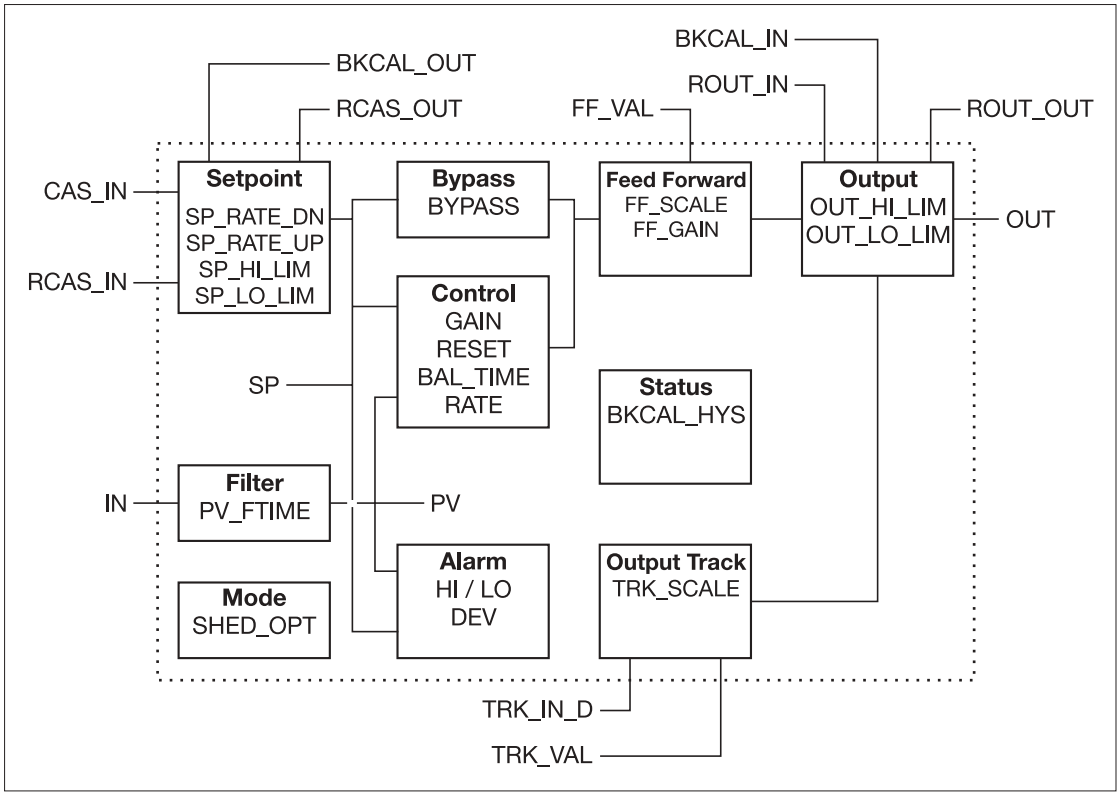

4.4 Description

The Process Value to be controlled is connected to the IN input. This value is passed through a filter whose time constant is PV_FTIME. The value is then shown as the PV, which is used in conjunction with the SP in the PID algorithm. A PID will not integrate if the limit status of IN is constant. A full PV and DV alarm sub-function is provided. The PV has a status, although it is a Contained parameter.

This status is a copy of IN's status unless IN is good and there is a PV or block alarm.

The full cascade SP sub-function is used, with rate and absolute limits. There are additional control options which will cause the SP value to track the PV value when the block is in an actual mode of IMan, LO, Man or ROut. Limits do not cause SP-PV tracking.

There is a switch for BYPASS, which is available to the operator if the Bypass Enable control option is true. Bypass is used in secondary cascade controllers that have a bad PV. The Bypass Enable option is necessary because not all cascade control schemes will be stable if BYPASS is true. BYPASS can only be changed when the block mode is Man or O/S. While it is set, the value of SP, in percent of range, is passed directly to the target output, and the value of OUT is used for BKCAL_OUT. When the mode is changed to Cas, the upstream block is requested to initialize to the value of OUT. When a block is in Cas mode, then on the transition out of bypass, the upstream block is requested to initialize to the PV value, regardless of the »Use PV for BKCAL_OUT« option.

GAIN, RESET, and RATE are the tuning constants for the P, I, and D terms, respectively. Gain is a dimensionless number. RESET and RATE are time constants expressed in seconds. There are existing controllers that are tuned by the inverse value of some or all of them, such as proportional band and repeats per minute. The human interface to these parameters should be able to display the user's preference. The Direct Acting control option, if true, causes the output to increase when the PV exceeds the SP. If false, the output will decrease when the PV exceeds the SP. It will make the difference between positive and negative feedback, so it must be set properly, and never changed while in an automatic mode. The setting of the option must also be used in calculating the limit state for BKCAL_OUT.

The output supports the feed forward algorithm. The FF_VAL input brings in an external value which is proportional to some disturbance in the control loop. The value is converted to percent of output span using the values of parameter FF_SCALE. This value is multiplied by the FF_GAIN and added to the target output of the PID algorithm. If the status of FF_VAL is Bad, the last usable value will be used, because this prevents bumping the output. When the status returns to good, the block will adjust its integral term to maintain the previous output.

The output supports the track algorithm.

There is an option to use either the SP value after limiting or the PV value for the BKCAL_OUT value..

4.5 Supported Modes

O/S, IMan, LO, Man, Auto, Cas, RCas, and ROut.

4.6 Alarm Types

Standard block alarm plus standard HI_HI, HI, DV_HI, DV_LO, LO, and LO_LO alarms applied to PV.

4.7 Mode Handling

Standard transition in and out of O/S.

4.8 Status Handling

Standard, plus the following things for the control selector If Not selected is received at BKCAL_IN, the PID algorithm should make necessary adjustments to prevent windup.

4.9 Initialization

Standard.

4.10 PID Control Block Parameter List

Parameter	Rel. Index	Description	Type	Store	Size byte	RO / R/W	Min.	Max.	Default
ST_REV	1	The revision level of the static data associated with the function block. To support tracking changes in static parameter attributes, the associated block's static revision parameter will be incremented each time a static parameter attribute value is changed. Also, the associated block's static revision parameter may be incremented if a static parameter attribute is written but the value is not changed.	Unsigned 16	SRC	2	RO			0
TAG_DESC	2	The user description of the intended application of the block.	Octet String	SRC	32	R/W			spaces
STRATEGY	3	The strategy field can be used to identify grouping of blocks. This data is not checked or processed by the block.	Unsigned 16	SRC	2	R/W			0
ALERT_KEY	4	Contains the identification number of the plant unit. It helps to identify the location (plant unit) of an event.	Unsigned 8	SRC	1	R/W	1	255	0
MODE_BLK	5	Contains the current mode and the permitted and normal mode of the block.	DS-69	Mix	4	Mix			O/S
BLOCK_ERR	6	This parameter reflects the error status associated with the hardware or software components associated with a block. It is a bit string, so that multiple errors may be shown.	Bit String	D	2	RO			
PV	7	Either the primary analog value for use in executing the function, or a process value associated with it. May also be calculated from the READBACK value of an AO block.	DS-65	D	5	RO			
SP	8	The analog setpoint of this block.	DS-65	N	5	R/W	PV_SCALE ±10%		
OUT	9	The primary analog value calculated as a result of executing the function.	DS-65	N	5	R/W	OUT_SCALE ±10%		
PV_SCALE	10	The high and low scale values, engineering units code, and number of digits to the right of the decimal point to be used in displaying the PV parameter and parameters which have the same scaling as PV.	DS-68	SRC	11	R/W			0-100%
OUT_SCALE	11	The high and low scale values, engineering units code, and number of digits to the right of the decimal point to be used in displaying the OUT parameter and parameters which have the same scaling as OUT.	DS-68	SRC	11	R/W			0-100%
GRANT_DENY	12	Options for controlling access of host computer and local control panels to operating, tuning and alarm parameters of the block.	DS-70	SRC	2	R/W			
CONTROL_OPTS	13	Options which the user may select to alter the calculations done in a control block.	Bit String	SRC	2	R/W			0
STATUS_OPTS	14	Options which the user may select in the block processing of status.	Bit String	SRC	2	R/W			0
IN	15	The primary input value of the block, required for blocks that filter the input to get the PV.	DS-65	N	5	R/W			
PV_FTIME	16	Time constant of a single exponential filter for the PV, in seconds.	Float	SRC	4	R/W	Positive		0
BYPASS	17	The normal control algorithm may be bypassed through this parameter. When bypass is set, the setpoint value (in percent) will be directly transferred to the output. To prevent a bump on transfer to/from bypass, the setpoint will automatically be initialized to the output value or process variable, respectively, and the path broken flag will be set for one execution.	Unsigned 8	SRC	1	R/W	1	2	0
CAS_IN	18	This parameter is the remote setpoint value, which must come from another Fieldbus block, or a DCS block through a defined link.	DS-65	N	5	R/W			
SP_RATE_DN	19	Ramp rate at which downward setpoint changes are acted on in Auto mode, in PV units per second. If the ramp rate is set to zero, then the setpoint will be used immediately. For control blocks, rate limiting will apply only in Auto. For output blocks, rate limiting will apply in Auto, Cas, and RCas modes.	Float	SRC	4	R/W	Positive		+INF
SP_RATE_UP	20	Ramp rate at which upward setpoint changes are acted on in Auto mode, in PV units per second. If the ramp rate is set to zero, then the setpoint will be used immediately. For control blocks, rate limiting will apply only in Auto. For output blocks, rate limiting will apply in Auto, Cas, and RCas modes.	Float	SRC	4	R/W	Positive		+INF
SP_HI_LIM	21	The setpoint low limit is the lowest setpoint operator entry that can be used for the block.	Float	SRC	4	R/W	PV_SCALE ±10%		100
SP_LO_LIM	22	The setpoint high limit is the highest setpoint operator entry that can be used for the block.	Float	SRC	4	R/W	PV_SCALE ±10%		0

Parameter	Rel. Index	Description	Type	Store	Size byte	RO / R/W	Min.	Max.	Default
GAIN	23	Dimensionless value used by the block algorithm in calculating the block output.	Float	SRC	4	R/W			0
RESET	24	The integral time constant, in seconds per repeat.	Float	SRC	4	R/W	Positive		+INF
BAL_TIME	25	This specifies the time for the internal working value of bias or ratio to return to the operator set bias or ratio, in seconds. In the PID block, it may be used to specify the time constant at which the integral term will move to obtain balance when the output is limited and the mode is Auto, Cas, or RCas.	Float	SRC	4	R/W	Positive		0
RATE	26	Defines the derivative time constant, in seconds.	Float	SRC	4	R/W	Positive		0
BKCAL_IN	27	The value and status from a lower block's BKCAL_OUT that is used to prevent reset windup and to initialize the control loop.	DS-65	N	5	R/W			
OUT_HI_LIM	28	Limits the maximum output value.	Float	SRC	4	R/W	OUT_SCALE ±10%		100
OUT_LO_LIM	29	Limits the minimum output value.	Float	SRC	4	R/W	OUT_SCALE ±10%		0
BKCAL_HYS	30	The amount that the output must change away from its output limit before the limit status is turned off, expressed as a percent of the span of the output.	Float	SRC	4	R/W	0	50	0.5
BKCAL_OUT	31	The value and status required by an upper block's BKCAL_IN so that the upper block may prevent reset windup and provide bumpless transfer to closed loop control.	DS-65	D	5	RO			
RCAS_IN	32	Target setpoint and status provided by a supervisory Host to a analog control or output block.	DS-65	N	5	R/W			
ROUT_IN	33	Target output and status provided by a Host to the control block for use as the output (ROut mode).	DS-65	N	5	R/W			
SHED_OPT	34	Defines action to be taken on remote control device timeout.	Unsigned 8	SRC	1	R/W			0
RCAS_OUT	35	Block setpoint and status after ramping - provided to a supervisory Host for back calculation and to allow action to be taken under limiting conditions or mode change.	DS-65	D	5	RO			
ROUT_OUT	36	Block output and status - provided to a Host for back calculation in ROut mode and to allow action to be taken under limited conditions or mode change.	DS-65	D	5	RO			
TRK_SCALE	37	The high and low scale values, engineering units code, and number of digits to the right of the decimal point, associated with TRK_VAL.	DS-68	SRC	11	R/W			0-100%
TRK_IN_D	38	This discrete input is used to initiate external tracking of the block output to the value specified by TRK_VAL.	DS-66	N	2	R/W			
TRK_VAL	39	This input is used as the track value when external tracking is enabled by TRK_IN_D.	DS-65	N	5	R/W			
FF_VAL	40	The feed forward value and status.	DS-65	N	5	R/W			
FF_SCALE	41	The feedforward input high and low scale values, engineering units code, and number of digits to the right of the decimal point.	DS-68	SRC	11	R/W			0-100%
FF_GAIN	42	The gain that the feed forward inpt is multiplied by before it is added to the calculated control output.	Float	SRC	4	R/W			0
UPDATE_EVT	43	This alert is generated by any change to the static data.	DS-73	D	14	RO			
BLOCK_ALM	44	The block alarm is used for all configuration, hardware, connection failure or system problems in the block. The cause of the alert is entered in the subcode field. The first alert to become active will set the Active status in the Status attribute. As soon as the Unreported status is cleared by the alert reporting task, another block alert may be reported without clearing the Active status, if the subcode has changed.	DS-72	D	13	R/W			
ALARM_SUM	45	The current alert status, unacknowledged states, unreported states, and disabled states of the alarms associated with the function block.	DS-74	Mix	8	R/W			
ACK_OPTION	46	Selection of whether alarms associated with the block will be automatically acknowledged. 0 = Auto Ack Disabled; 1 = Auto Ack Enabled.	Bit String	SRC	2	R/W	0	1	0
ALARM_HYS	47	Amount the PV must return within the alarm limits before the alarm condition clears. Alarm Hysteresis is expressed as a percent of the PV span.	Float	SRC	4	R/W	0	50	0.5
HI_HI_PRI	48	Priority of the high high alarm.	Unsigned 8	SRC	1	R/W	0	15	0
HI_HI_LIM	49	The setting for high high alarm in engineering units.	Float	SRC	4	R/W	PV_SCALE	+INF	+INF
HI_PRI	50	Priority of the high alarm.	Unsigned 8	SRC	1	R/W	0	15	0

Parameter	Rel. Index	Description	Type	Store	Size byte	RO / R/W	Min.	Max.	Default
HI_LIM	51	The setting for high alarm in engineering units.	Float	SRC	4	R/W	PV_ SCALE	+INF	+INF
LO_PRI	52	Priority of the low alarm.	Un-signed 8	SRC	1	R/W	0	15	0
LO_LIM	53	The setting for the low alarm in engineering units.	Float	SRC	4	R/W	-INF	PV_ SCALE	-INF
LO_LO_PRI	54	Priority of the low low alarm.	Un-signed 8	SRC	1	R/W	0	15	0
LO_LO_LIM	55	The setting of the low low alarm in engineering units.	Float	SRC	4	R/W	-INF	PV_ SCALE	-INF
DV_HI_PRI	56	Priority of the high deviation alarm.	Un-signed 8	SRC	1	R/W	0	15	0
DV_HI_LIM	57	The setting of the high deviation alarm limit in engineering units.	Float	SRC	4	R/W	0	PV span	+INF
DV_LO_PRI	58	Priority of the low deviation alarm.	Un-signed 8	SRC	1	R/W	0	15	0
DV_LO_LIM	59	The setting of the low deviation alarm limit in engineering units.	Float	SRC	4	R/W	-PV span	0	-INF
HI_HI_ALM	60	The status for high high alarm and its associated time stamp.	DS-71	D	16	R/W			
HI_ALM	61	The status for high alarm and its associated time stamp.	DS-71	D	16	R/W			
LO_ALM	62	The status of the low alarm and its associated time stamp.	DS-71	D	16	R/W			
LO_LO_ALM	63	The status of the low low alarm and its associated time stamp.	DS-71	D	16	R/W			
DV_HI_ALM	64	The status and time stamp associated with the high devia-tion alarm.	DS-71	D	16	R/W			
DV_LO_ALM	65	The status and time stamp associated with the low devia-tion alarm.	DS-71	D	16	R/W			

5.0 Link Active Scheduler (LAS)

5.1 Introduction:

PR6350 features a LAS function which is only available in Fieldbus Foundation installations. Please note that the LAS function has not been specified by the Profibus Nutzerorganisation and is therefore not available in Profibus installations.

5.2 Overview

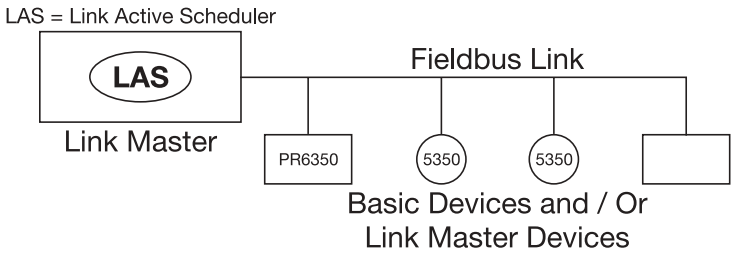

5.3 Description

All links have one and only one Link Active Scheduler (LAS). The LAS operates as the bus arbiter for the link. The LAS does the following:

- recognizes and adds new devices to the link.
- removes non-responsive devices from the link.
- distributes Data Link (DL) and Link Scheduling (LS) time on the link. Data Link Time is a network-wide time periodicallydistributed by the LAS to synchronize all device clocks on the bus. Link Scheduling time is a link-specific time represented as an offset from Data Link Time. It is used to indicate when the LAS on each link begins and repeats its schedule. It is used by system management to synchronize function block execution with the data transfers scheduled by the LAS.
- polls devices for process loop data at scheduled transmission times.
- distributes a priority-driven token to devices between scheduled transmissions.

Any device on the link may become the LAS, as long as it is capable. The devices that are capable of becoming the LAS are called link master devices. All other devices are referred to as basic devices. When a segment first starts up, or upon failure of the existing LAS, the link master devices on the segment bid to become the LAS. The link master that wins the bid begins operating as the LAS immediately upon completion of the bidding process. Link masters that do not become the LAS act as basic devices. However, the link masters can act as LAS backups by monitoring the link for failure of the LAS and then bidding to become the LAS when a LAS failure is detected.

Only one device can communicate at a time. Permission to communicate on the bus is controlled by a centralized token passed between devices by the LAS. Only the device with the token can communicate. The LAS maintains a list of all devices that need access to the bus. This list is called the “Live List.”

Two types of tokens are used by the LAS. A time-critical token, compel data (CD), is sent by the LAS according to a schedule. A non-time critical token, pass token (PT), is sent by the LAS to each device in ascending numerical order according to address.

Head office

Denmark
PR electronics A/S
Lerbakken 10
DK-8410 Rønde

www.prelectronics.com
sales@prelectronics.dk
tel. +45 86 37 26 77
fax +45 86 37 30 85

Subsidiaries

France
PR electronics Sarl
Zac du Chêne, Activillage
2, allée des Sorbiers
F-69500 Bron

sales@prelectronics.fr
tel. +33 (0) 4 72 14 06 07
fax +33 (0) 4 72 37 88 20

Germany
PR electronics GmbH
Bamlerstraße 92
D-45141 Essen

sales@prelectronics.de
tel. +49 (0) 201 860 6660
fax +49 (0) 201 860 6666

Italy
PR electronics S.r.l.
Via Meli, 36
IT-20127 Milano

sales@prelectronics.it
tel. +39 02 2630 6259
fax +39 02 2630 6283

Spain
PR electronics S.L.
Avda. Meridiana 354, 6°-A
E-08027 Barcelona

sales@prelectronics.es
tel. +34 93 311 01 67
fax +34 93 311 08 17

Sweden
PR electronics AB
August Barks gata 6
S-421 32 Västra Frölunda

sales@prelectronics.se
tel. +46 (0) 3149 9990
fax +46 (0) 3149 1590

UK
PR electronics Ltd
20 Aubery Crescent, Largs
Ayrshire, KA30 8PR

sales@prelectronics.co.uk
tel. +44 (0) 1475 689 588
fax +44 (0) 1475 689 468

USA
PR electronics Inc.
16776 Bernardo Center Drive
Suite 203
San Diego, California 92128

sales@prelectronics.com
tel. +1 858 521 0167
fax +1 858 521 0945

5 YEARS PRODUCT GUARANTEE

DS CERTIFIED | Quality System DS/EN ISO 9001 | under DANAK Reg.nr. 5002 | under RvA Reg.No. 41